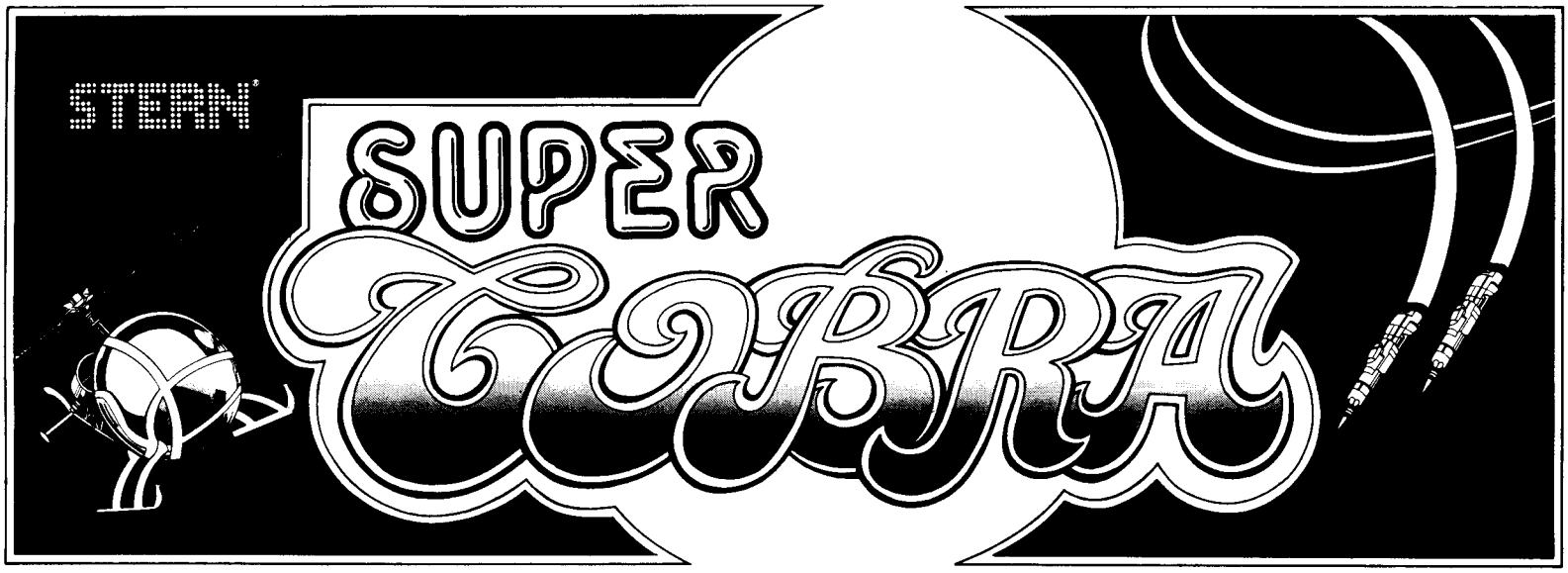
STERN
SUPER
COBRA

SUPER COBRA

Packing List:

13C-2-32 quarter windows	2
34C-849-S PS 1100 schematic	1
12A-290 Fcc warning	1
12B-339 monitor schematic	1
K4615-5808 monitor schematic	1
super cobra manual	1
12A-281 return card	1
4A fast blow fuse	1
1A slow blow fuse	1
3A slow blow fuse	1
2A slow blow fuse	1
super cobra schematic set	1

SUPER COBRA

The object of the game is to invade 10 SUPER COBRA defense systems of increasing difficulty and safely pick up the BOOTY.

Use the joystick to move up, down, accelerate and decelerate. Use the Laser and Bombs to destroy defenders. Hitting tanks scores Mystery Value worth 100, 200, or 300 points. Rockets, Tanks, Missiles, and UFO's may all fire at invader. Hit fuel tanks for extra fuel for CHOPPER. The Chopper uses up fuel as it flies, except in between defense levels.

At 10,000 points, the player is awarded a BONUS CHOPPER.

At the end of the game, the player can continue at the defense level he left off on by depositing extra coins and pressing the discharge button on the left-hand side of the panel.

If the Booty is destroyed on the BASE level, the player may try again. When the Booty is safely recovered, a Bonus Chopper is awarded and play resumes at defense level Number 1 where the fuel is used up faster and the defenders fire more often.

SUPER COBRA Defense Level Descriptions

*Fuel Tanks appear on **every** defense level.

*Tanks appear and fire on all levels except level 8 where they do not fire.

Level 1 — Player must maneuver the chopper over mountainous terrain against fast and slow firing rockets.

Level 2 — Chopper faces Arcing missiles over a mountain terrain.

Level 3 — Smart Bombs flying in groups of 4 over mountainous terrain. Rockets appear, but do not fire.

Level 4 — Single Smart Bombs over mountainous terrain. Again, Rockets appear but do not fire.

Level 5 — Chopper flies through a cavern-like terrain against Falling Mines.

Level 6 — Rapidly firing, Roving Tanks over mountainous terrain. Rockets appear, but do not fire.

Level 7 — Maneuver through a field of meteors which explode when hit with bombs or 3 times with Laser, plus a single, green, shadow meteor directly in front of Chopper which explodes when hit 5 times with Laser. Rockets appear but do not fire.

Level 8 — Chopper flies over mountainous terrain against rapidly firing UFO's. Tanks and Rockets appear, but do not fire.

Level 9 — Chopper faces arcing missiles over tall buildings.

Level 10 — Firing rockets in a Building Maze.

Base — Player must maneuver the Chopper over tall buildings against arcing missiles and rapidly firing tanks to reach the Booty and safely carry it away.

SUPER COBRA DIP SWITCH

HELICOPTER'S BODY NO.	DIP 1
3	ON
5	OFF

POSSIBLE ADDITIONAL GAME NUMBER	DIP 2
ONCE	ON
∞ INFINITY	OFF

TABLE / UR	DIP 3
UPRIGHT	ON
TABLE	OFF

BONUS HELICOPTER
TEN THOUSAND POINT OR ONE ROUND CLEAR TIME

1 WAY	2 WAY	DIP 4	DIP 5
4 COIN 3 PLAY	1 COIN 3 PLAY	OFF	OFF
2 COIN 1 PLAY	1 COIN 3 PLAY	OFF	ON
1 COIN 1 PLAY	1 COIN 3 PLAY	ON	OFF
1 COIN 99 PLAY	1 COIN 3 PLAY	ON	ON

WARNING: THIS EQUIPMENT GENERATES, USES, AND CAN RADIATE RADIO FREQUENCY ENERGY AND IF NOT INSTALLED AND USED IN ACCORDANCE WITH THE INSTRUCTION MANUAL, MAY CAUSE INTERFERENCE TO RADIO COMMUNICATIONS. AS TEMPORARILY PERMITTED BY REGULATION IT HAS NOT BEEN TESTED FOR COMPLIANCE WITH THE LIMITS FOR CLASS A COMPUTING DEVICES PURSUANT TO SUBPART J OF PART 15 OF FCC RULES, WHICH ARE DESIGNED TO PROVIDE REASONABLE PROTECTION AGAINST SUCH INTERFERENCE. OPERATION OF THIS EQUIPMENT IN A RESIDENTIAL AREA IS LIKELY TO CAUSE INTERFERENCE IN WHICH CASE THE USER AT HIS OWN EXPENSE WILL BE REQUIRED TO TAKE WHATEVER MEASURES MAY BE REQUIRED TO CORRECT THE INTERFERENCE.

Stern Electronics, Inc. 1725 Diversey Parkway, Chicago, Illinois 60614, 312/935-4600, Telex 25-4657

REVISIONS				
SYM	DESCRIPTION	DFT DATE	CHK DATE	APPD DATE
A	ISSUED E.I. 00922.	[illegible]	[illegible]	[illegible]

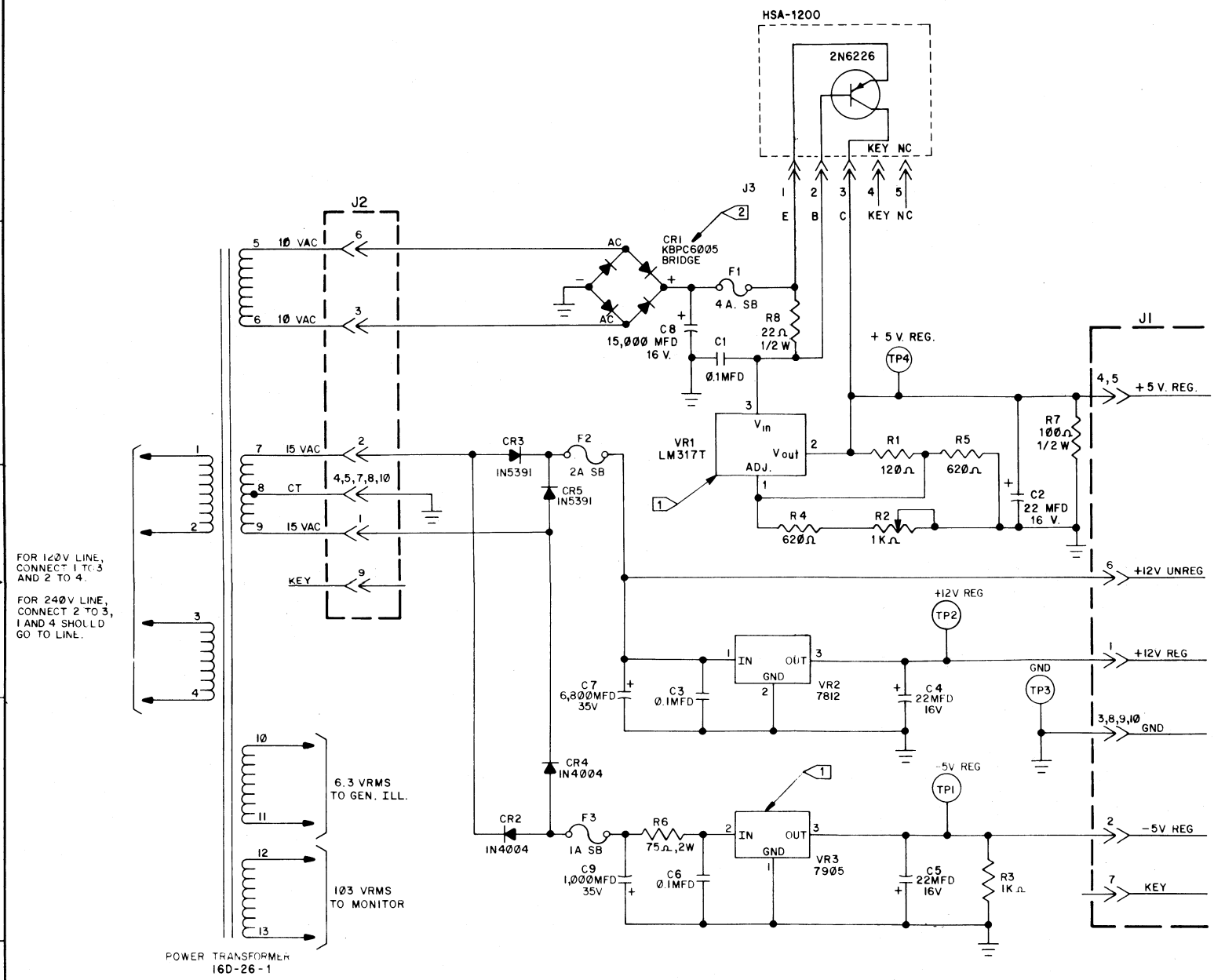

NOTES

1. SHOULDER WASHER REQUIRED ON MOUNTING STUD
2. GENERAL INSTRUMENTS.

STERN ELECTRONICS, INC.
1725 Diversey Parkway, Chicago, Illinois 60614
(312) 935-4600, Telex 25-4657
Toll Free Service Assistance (800) 621-6424

SCHEMATIC, POWER SUPPLY
P.C. BOARD
34C-978-S

SH 1 OF 1
34C-978-S

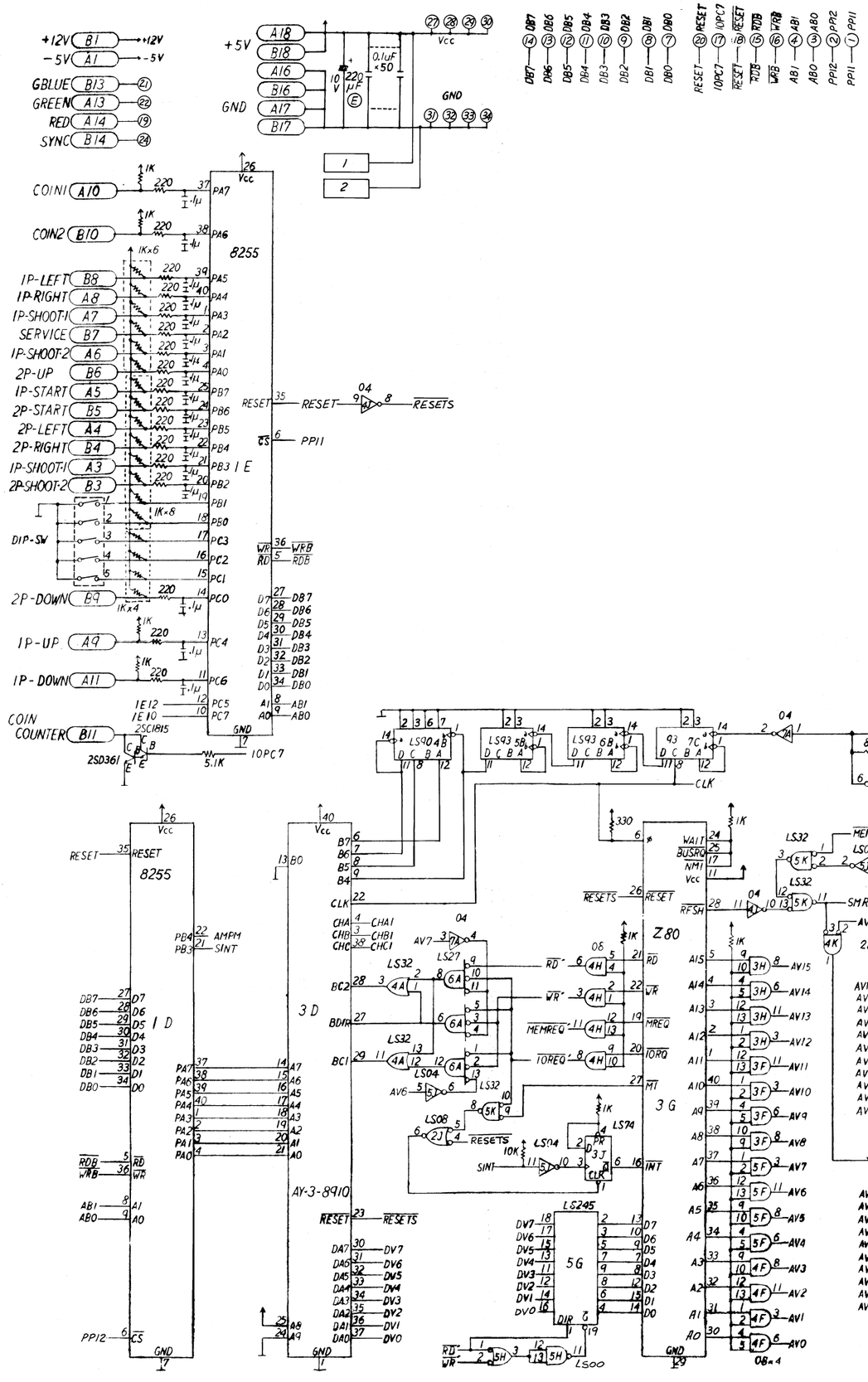

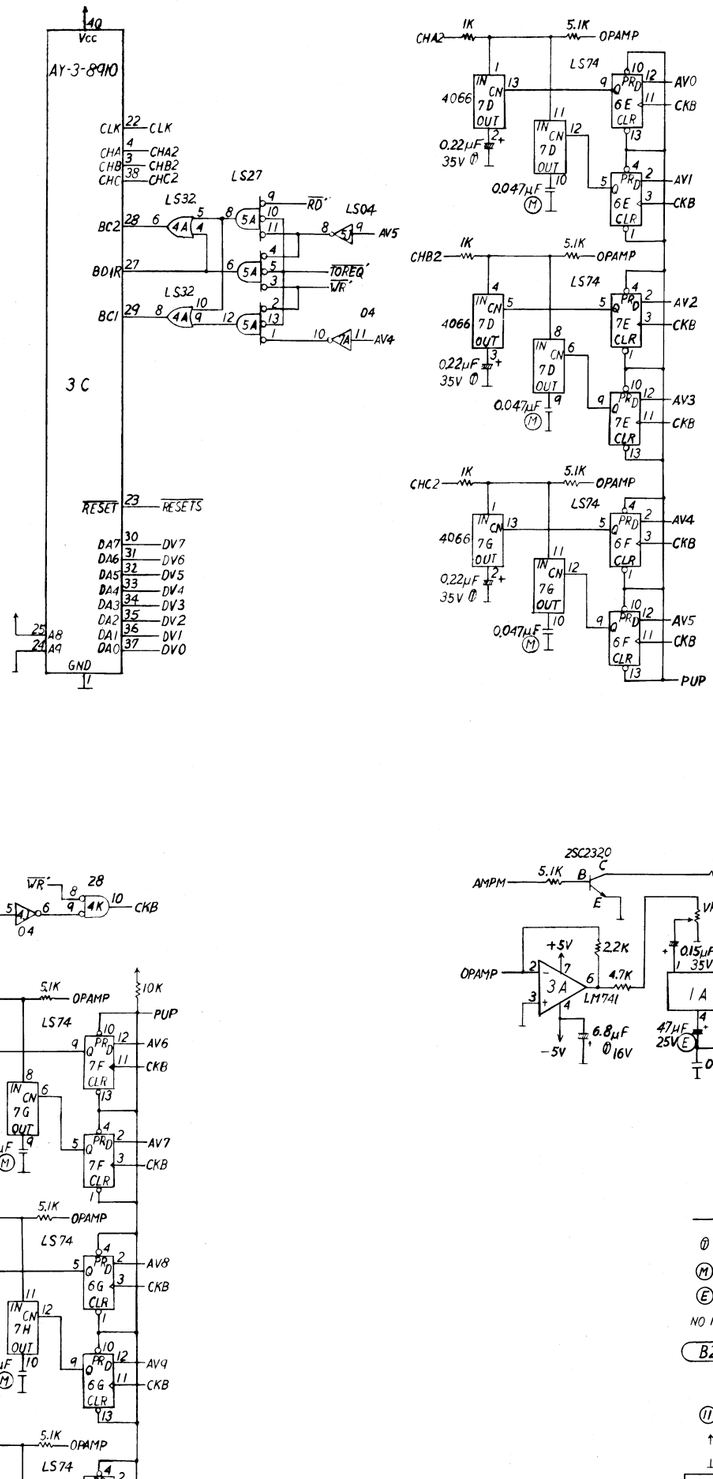

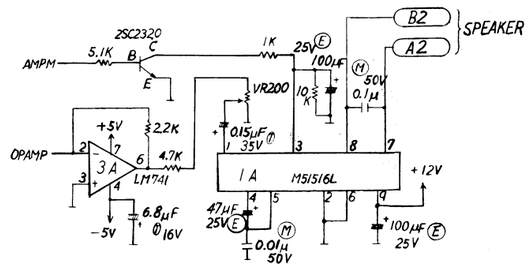

— NOTES —

Ⓣ : TANTALUM ELECTROLYTIC CONDENSER.

Ⓜ : MYLAR CAPACITOR.

Ⓔ : ELECTROLYTIC CONDENSER.

NO MARK : CERAMIC CONDENSER.

B2 ; 36 PIN CONNECTOR. B is parts side.

⑪ ; 34PIN CONNECTOR.

↑ ; Vcc , +5V

⊥ ; GND, 0V

1 ; 2 PIN CONNECTOR.

L-1200-1B
SUPER COBRA

STERN ELECTRONICS, INC.
1725 Diversey Parkway, Chicago, Illinois 60614
(312) 935-4600.
Toll Free Service Assistance (800) 621-6424

—NOTES—

↑ ;Vcc +5V

⊥ ;GND 0V

STERN ELECTRONICS, INC.
1725 Diversey Parkway, Chicago, Illinois 60614
(312) 935-4500.
Toll Free Service Assistance (800) 621-6424

L-1200-2B
SUPER COBRA