KONAMI®

ORIGINAL VIDEO GAME

OPERATOR'S MANUAL

Innocent Sweeper

SILENT SCOPE 2

Innocent Sweeper SILENT SCOPE 2™

©2000 KONAMI ALL RIGHTS RESERVED.

- Failure to operate the machine correctly could result in malfunction or accidents,so please read this manual carefully before commencing operation. Be sure to operate the machine as described in this manual.
- Keep this manual carefully so as to be ready for use when necessary.

PN.0000072498 GQ931

KONAMI®

About this product

Thank you for purchasing this KONAMI product. This manual explains how to operate your game machine correctly and safely.

•Failure to operate the machine correctly could result in malfunction or accidents, so please read this manual carefully before commencing operation. Be sure to operate the machine as described in this manual.
•Keep this manual carefully so as to be ready for use when necessary.
•If the machine still fails to display or to get started, immediately turn OFF the main power switch, unplug the power cord from the receptacle and contact your nearest dealer.

•This manual covers the following models:

•GQ931-TB **•GQ931-SD**

•GQ931-HD

The specifications of GQ931-TB may be somewhat different from GQ931-SD and GQ931-HD. In such a case, read the descriptions of the model which applies to the game machine you are operating.

•The specifications of this product are subject to change without notice for reasons such as improving the performance.

•The contents of this game, its main devices and design are protected under each law concerning patent, copyright and other intellectual properties.

•Unauthorized reproduction of this document or any of its contents is strictly forbidden.

© 2000 KONAMI ALL RIGHTS RESERVED.

Driver software used under license of 3Dfx interactive.

Contents

■ **Precautions for use** **2**
安全使用注意事項 **10**

■ **Locations of warning and other safety labels** **7**
警告標簽等的張貼位置 **15**

1 Specifications **8**
規　　格 **16**

2 Names of parts **18**

3 How to play **19**

4 Opening and closing the doors
4-1 Opening and closing the maintenance door **20**
4-2 Opening and closing the coin door **21**
4-3 Opening and closing the monitor adjustment door **22**

5 Networking game machine and game settings
5-1 How to networking **23**
5-2 Checking the game performance **24**
5-3 Setting and adjustment of game mode **25**
5-4 Mode descriptions **26**

6 Installation and assembling
6-1 Fastening the adjusters **38**
6-2 Installing the step cover **39**
6-3 Installing the title unit **40**
6-4 Service panel **40**
6-5 Power unit **41**
6-6 Separating the machine **42**
6-7 Moving the coin counter **45**

7 Maintenance
7-1 Replacing the coin selector **46**
7-2 Replacing the fluorescent light **47**
7-3 Replacing the start button **48**
7-4 Replacing the rifle unit **50**
7-5 Replacing the rifle unit microswitch **51**
7-6 Replacing the scope **52**
7-7 Replacing the rifle unit potentiometers **53**
7-8 Taking out the PCB unit **57**
7-9 Resetting the circuit protector **59**
7-10 Adjusting the monitor **60**
7-11 Adjusting the brightness on the scope LCD screen **61**
7-12 Troubleshooting **62**

8 Annex
8-1 Label locations and exploded view **66**
8-2 Wiring diagram **77**

ENGLISH

■ Precautions for use

The following safety precautions are given throughout this manual. They must be strictly followed to protect those who install, use or maintain this product as well as to prevent other people's injuries and property damages.

Be sure to read the following

•The following suggestions show the degree of danger and damage caused when the product is used improperly with the suggestions disregarded.

⚠ **WARNING**	**Indicates a situation where disregarding the suggestions could result in death or serious injury.**
⚠ **CAUTION**	**Indicates a situation where disregarding the suggestions could result in injury or product damage.**

•The following graphic suggestions describe the types of precautions to be followed.

⚠	**Indicates a matter of which care should be taken.**
⃠	**Indicates a matter which is forbidden.**
	Indicates a matter which should be performed without fail.

•Definitions of qualified in-shop maintenance persons and industry specialist who handle this product.

•In this instruction manual, some procedures require a qualified in-shop maintenance person or industry specialist. For such instructions, a qualified person must take care of the jobs.

·Otherwise an electric shock, machine trouble, or a serious accident may result.

·Replacing the machine parts, inspecting and maintaining the machines, and troubleshooting must be assigned only to a qualified in-shop maintenance person or industry specialist. This booklet gives instructions that hazardous jobs in particular must be handled by an industry specialist. Qualified in-shop maintenance persons and industry specialist are defined as follows.

Qualified in-shop maintenance persons

· A qualified in-shop maintenance person must have experiences in maintaining amusement machines, money changers and the like. Under the supervision of an amusement machines shop owner or manager, he or she routinely assembles, installs, inspects and maintains the amusement machines, or replaces their component units and consumable parts, in the amusement machines workshop and/or shop.

Jobs handled by qualified in-shop maintenance persons

· Assembling, installing, inspecting and maintaining amusement machines and money changers, and replacing their component units and consumable parts.

Industry specialist

· An industry specialist must be engaged in designing, manufacturing, inspecting and servicing amusement machines. Or he or she must have an education in electrical, electronic and mechanical engineering, and routinely maintain and repair amusement machines.

Jobs handled by industry specialist

· Assembling and installing amusement machines and money changers, and repairing and adjusting their electrical, electronic and mechanical component parts.

Setting Up

WARNING

•Be sure to consult your nearest dealer when setting up, moving or transporting this product.
·This product should not be set up, moved or transported by anyone other than industry specialist. Doing so could result in injury or product damage.
·When installing this product, set the 6 adjusters stable on the floor and make sure that the product is installed stably in a horizontal position. Unstable installation may result in injury or accident.
·When installing this product, use case not to apply undue force to opening and closing parts and other movable parts. Otherwise, injury or accident may result, or the product may be damaged.

•This product is an indoor game machine. Never set up the game machine outside.
·Setting up this product outside could result in accidents or equipment failure.

•Do not set up the game machine near emergency exits.
·Doing so could block exits in time of emergency and could result in death or serious injury.

•Do not set up the game machine.
·Otherwise an accident or malfunction may result.
·In a place exposed to rain or moisture.
·In a place exposed to direct sunlight.
·In a place exposed to direct heat from air-conditioning and heating equipment, etc..
·Near hazardous flammable substance such as thinner and kerosene.
·On an inclined or uneven floor.
·Near fire extinguishing equipment.
·In a place exposed to strong vibration.
·In a place exposed to excessive dust.
·Near equipment generating strong magnetism or electric waves.

•Do not place containers holding chemicals or water on or near the game machine.
·Electrical shock or damage could be caused by water or foreign matter entering the inside of the machine.

•Do not place objects near the ventilating holes.
·Doing so could cause the internal temperature to rise excessively, resulting in fire or equipment failure.

•Do not bend the power cord by force or place heavy objects on it.
·Doing so could result in electric leakage or fire.

•Never plug or unplug the power cord with wet hands.
·Doing so could result in electrical shock.

•Never unplug by pulling the power cord.
·Doing so could damage the cord, resulting in electric leakage or fire.

ENGLISH

Setting Up

CAUTION

- **Be sure to use indoor wiring for within the specified voltage range. For extension cord, use indoor wiring of the specified rating or more.**
  ·Failure to do so could result in fire or equipment failure.

- **Be sure to use the attached power cord.**
  ·Otherwise a fire or machine trouble may result.

- **Never plug more than one cord at a time in the electrical receptacle.**
  ·Doing so could result in fire or electrical shock.

- **Do not lay the power cord, networking cable where people walk through. You may tread on or stumble over them.**
  ·You may stumble down and get injured, or damage the power cord and networking cable.

- **Be sure to ground this product.**
  ·Otherwise an electric shock or machine trouble may be caused.

- **Do not apply a strong force for moving the machine.**
  ·Otherwise, it may result in an accident or breakage of the units.

- **Do not hold the rifle unit when moving the machine.**
  ·Otherwise, it may result in an injury or damage to this product.

- **Clearance of 100 mm (3.94in) or more should be created between the game machine and walls.**
  ·Otherwise the machine (s) cannot be ventilated well, resulting in malfunction.

- **Do not change the DIP switch setting of this product to other than factory setting.**
  ·Otherwise, the game can not be played properly.

Operation

WARNING

- **If there is any abnormality such as smoke, bad smell or abnormal noise being emitted from the machine, immediately turn OFF the main power switch and unplug the power cord from the receptacle to stop operating it.**
  ·Using the machine in abnormal conditions could result in fire or accidents.

In case of abnormality

1 Turn OFF the main power switch.
2 Unplug the power cord from the receptacle.
3 Contact your nearest dealer.

- **Do not leave the power cord plugged improperly or covered with dust.**
  ·Doing so could result in electrical shock or fire, so inspect the power cord periodically.

Operation

CAUTION

- **Do not use this product anywhere other than industrial areas.**
  ·Using in a residential area or an area next to a residential area could affect signal reception of radios, television sets, telephones, etc..
- **The following users should not play the game.**
  ·Doing so could cause accidents or illness.

·Those under the influence of alcohol.	·Those with drink and / or food in hand.
·Those suffering from or being treated for arm, wrist or small - of - the back ailments.	

- **Do not give impact to the glass cover.**
  ·Otherwise, it may result in an unexpected accident or injury.
- **Do not plug or unplug the power cord with wet hands.**
  ·Doing so could result in electrical shock.
- **In handling the power cord, follow the instructions below.**
  ·Otherwise an electric leak, fire or electric shock may result. Normal communication play may also be impossible.

·Do not damage the power cord.	·Do not modify the power cord.
·Do not bend the power cord excessively.	·Do not twist the power cord.
·Do not heat the power cord.	·Do not pull the power cord.
·Do not bind the power cord.	·Do not tread on the power cord.
·Do not sandwich the power cord.	·Do not drive a nail into the power cord.

- **If the power cord or power plug becomes damaged, stop using the machine immediately and ask your nearest dealer to replace the parts.**
  ·Using a damaged power cord or power plug could result in fire or electrical shock.

Inspection and cleaning

WARNING

- **Be sure to turn OFF the main power switch and unplug the power cord from the receptacle before inspecting or cleaning the machine.**
  ·Failure to do so could result in electrical shock.
- **When replacing parts, be sure to use parts of the correct specifications. Never use parts other than the specified ones.**
  ·Using improper parts could result in fire or equipment failure.
- **There are high-voltaged parts inside the product. Other persons than qualified industry specialist should not open the back door and side door. When the back door and side door is opened, pay due attention not to touch the inside unnecessarily.**
  ·Otherwise an accident or electric shock may result.
- **When opening the back door and side door, be sure to turn OFF the main power switch and unplug the power cord from the receptacle.**
  ·Otherwise, there may arise a danger of accident or electric shock.
- **Strictly refrain from disassembly and repair of parts which are not indicated in this manual, as well as settings and remodelling.**
  ·Otherwise, a fire, malfunction or trouble may result.
  In case of any trouble, ask your nearest dealer for repairs and other services.
  KONAMI will not resume any responsibility for the damage to the product attributable to disassembly and repair of parts which are not indicated in this manual, as well as settings and remodelling.
- **Gently open the fluorescent light cover.**
  ·Otherwise, the fluorescent light or other part may get broken.
- **To clean the game machine, wipe it with a soft cloth dampened in a neutral detergent and wrung out.**
  ·Using thinner or other organic solvent or alcohol may decompose the material.
  ·Electrical shock or equipment failure could be caused by water entering the inside of the machine.

ENGLISH

Moving and transportation

CAUTION

- **The game machine contains parts such as the monitor, electronic components and precision components which are sensitive to vibrations and impacts. Great care therefore should be taken when moving and transporting the game machine. Be sure not to let the machine tip over.**
- **Before moving the machine, be sure to turn OFF the main power switch, unplug the power cord, from the receptacle and remove the power cord and networking cable from the machine.**
  ·Stepping on or tripping over the power cord may result in an accident or damage the machine.
- **Before moving the machine, be sure to fully lift the six adjusters and move it on the casters.**
  ·Otherwise, an accident, breakage or trouble may result.
- **Do not apply a strong force for moving the machine.**
  ·Otherwise, it may result in an accident or breakage of the units.
- **Do not hold the rifle unit when moving the machine.**
  ·Otherwise, it may result in an injury or damage to this product.
- **When moving the monitor unit, be sure to push it along sideways (to the right or left). When moving it on a slope or getting it over a level difference, be sure to take the buddy system.**
  ·Otherwise, the unit may turn over, resulting in an accident or damage.
- **When moving the machine, take care that no undue force is applied to the opening / closing sections or moving sections of the machine.**
  ·Otherwise injury, accidents or machine damage may result.

Disposal

WARNING

- **When disposhing of the rifle unit of this product, do not leave it with the scope exposed.**
  ·Doing so could result in fire due to direct sunlight, etc..

PRECAUTION IN HANDLING

- When setting up, inspecting, maintaining, moving or transporting this product, follow the procedures and instructions set forth in this manual and perform such work safely.
- Do not remove labels of “WARNING”, “CAUTION”, etc. attached to the product.
- Do not set up, handle, inspect, maintain, move or transport this product under conditions equivalent to the condition of “WARNING” or “CAUTION” specified in this manual.
- If a new owner is to have this product as a result of transfer, etc., be sure to give this manual to the new owner.

Locations of warning and other safety labels

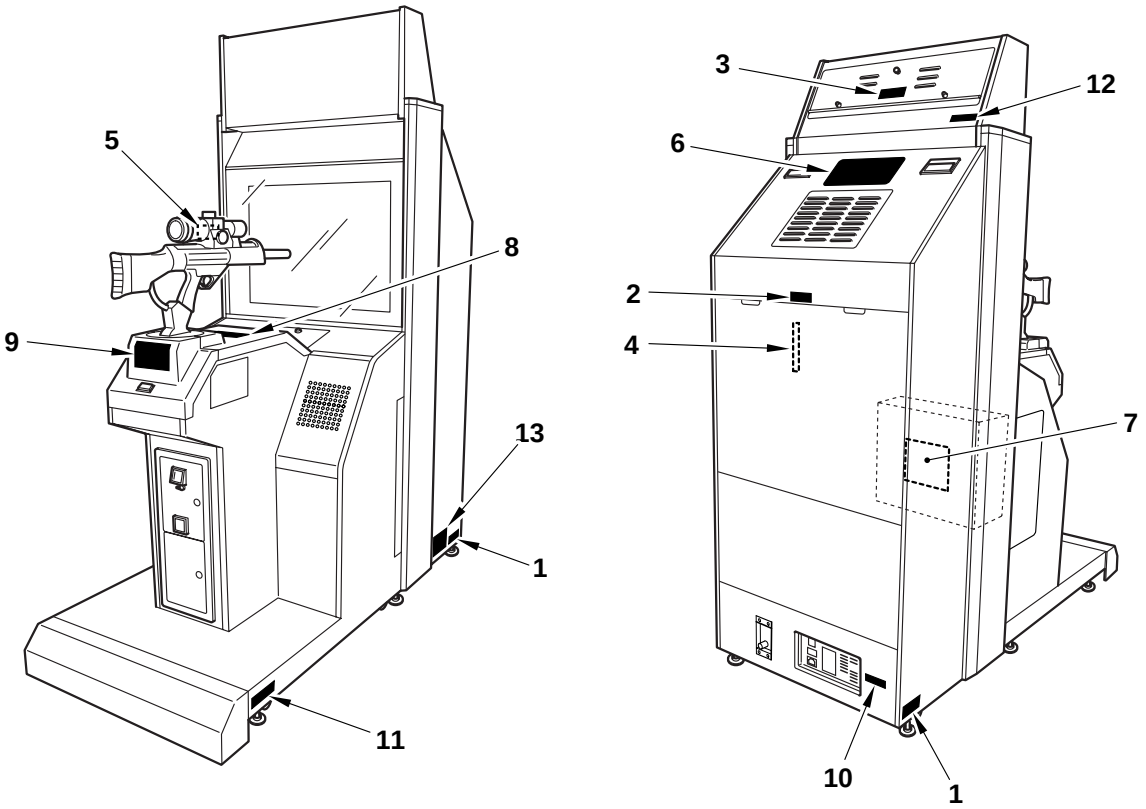

Types of warning and other safety labels

1

⚠ WARNING

Ensure all leg levellers are securely set and game cabinet is level.

00000036360

2

⚠ WARNING

ELECTRICAL SHOCK HAZARD.
DO NOT OPEN EXCEPT
FOR SERVICE.

PN.0000032450

3

⚠ CAUTION

Do not open this door roughly.
The fluorescent lamps are fragile.

PN.0000049568

4

⚠HAZARDOUS VOLTAGE ⚠HAZARDOUS VOLTAGE

PN.0000048870

5

⚠高電圧危険
⚠HAZARDOUS VOLTAGE

PN.0000060522

6

⚠ 警告(けいこく) WARNING

悪い例／BAD!

押す方向によっては転倒する場合があります。
本ユニットを移動させるときは、必ず図の方向で
押してください。また、斜面を移動するときや段差を
乗り越えるときは、必ず2人以上で行ってください。

良い例／GOOD!

Unit may fall if you push or truck from the wrong side. To move the unit, please push as indicated in the picture. When moving it on a slope or getting it over a level difference, be sure to take the buddy system.

PN.0000061697

7

⚠注意（ちゅうい）CAUTION

分解禁止 技術者以外は絶対に分解しないでください。けがや故障の原因になります。
This product should be disassembled by qualified industry specialists only. Failure to obey this warning could result in product damage, accident and injury.

基板を取り外す前に、必ず電源を切り、基板に接続されているコネクターを抜いてください。故障や感電の原因になります。
Turn the power OFF and disconnect the power supply from the PCB before removing the PCB cage. Failure to do so could result in machine failure and electrical shock.

使用直後に基板カバーを開ける際は、基板上の部品が熱くなっていることがあります。取り扱いには注意してください。
Pay careful attention when openning the PCB cage soon after play, because the contents will be hot.

禁止 ケースの上や近くには、水や薬品の入った容器や物を置かないでください。水分や異物が内部に入ると、感電や故障の原因になります。
Do not place containers holding chemicals or water on or near the game machine. Electrical shock or damage could be caused by water or foreign matter entering the inside of the machine.

禁止 濡れた手では触らないでください。感電することがあります。
Do not touch this with wet hands. Doing so could cause injury and electrical shock.

禁止 部品の交換は、必ず当社指定のものを使用してください。それ以外のものを使用したり流用することは絶対にしないでください。火災や異常作動、故障の原因になります。
When replacing parts, be sure to use parts of the correct specifications. Never use parts other than the specified ones. Using improper parts could result in fire,malfunction or equipment failure.

PN.0000060408

8

⚠ CAUTION

- Do not place any objects here. They may be knocked off by the gun.
- To avoid injuries, please keep observers away from the guns while game is in play.

9

⚠ CAUTION

To avoid breaking the gun, please do not place any weight on it. Also, please do not touch the scope.

10

Weight 127kg(280.0lb)

PN.0000061731

11

Weight 110kg(242.5lb)

PN.0000049002

12

Weight 12kg(26.5lb)

PN.0000061697

13

MODEL	GQ931-TB SILENT SCOPE 2
POWER	110 V / 60 Hz
	215W(MAX)
MANUFACTURER	KONAMI CO., LTD.
DATE OF MANUFACTURE	January.2000
WEIGHT	249Kg (549.0lb)
SERIAL NUMBER	

KONAMI®
MADE IN JAPAN
INDOOR USE
PN.0000073091

- The above is an example. The entries are different from destination to destination.

1 Specifications

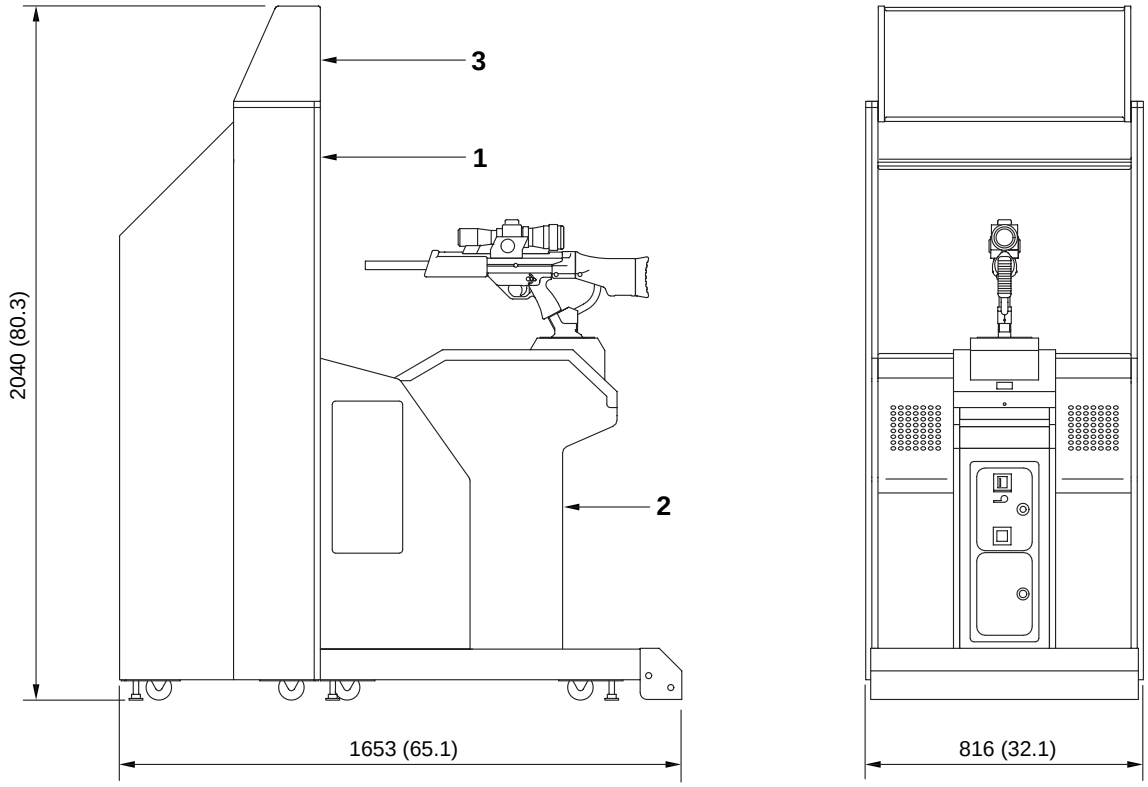

Specifications

Dimensions	Refer to the figure above : mm (in)
Weight	Approx.249 kg (549 lb) **1** Monitor unit : Approx. 127 kg (280.0 lb) **3** Title unit : Approx. 12 kg (26.5 lb) **2** Control unit : Approx. 110 kg (242.5lb)
Rated power consumption	•GQ931-TB : 215W (MAX) •GQ931-HD/SD: 170W (235VA)
Monitor	29-inch CRT(Scope: 2-inch LCD)
Service condition	Temperature 10 to 35˚C (50 to 95˚F), Humidity 20 to 80% (No dewing is allowed.)
Attachments	·Instruction manual ..... This manual ·Keys for coin door ..... 2 ·Keys for maintenance ..... 2 ·AC power cord ..... 1 ·Networking billboard ..... 1 ·Title unit ..... 1 ·Title unit mounting screw (M6 x 15L) ..... 4 ·Player number label ..... 1 ·Allen wrench (for servicing the scope) ..... 1 ·Networking cable 1

•If any part is defective or not found, contact your nearest dealer.

•The specifications of this product are subject to change without notice for reasons such as improving the performance.

Allowance for Carrying-in and Installation of Product

The following allowance dimensions are necessary for carrying the product indoors.

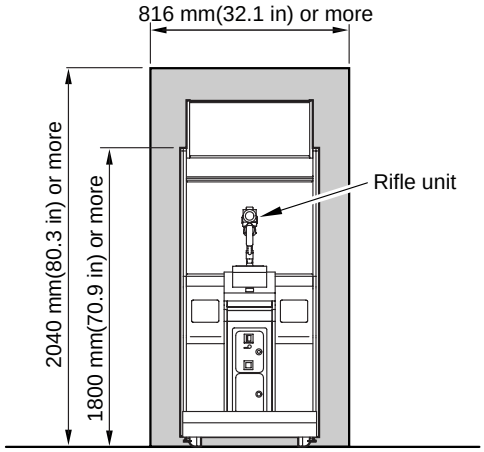

•Do not apply a strong force for moving the machine.
•Do not hold the rifle unit when moving the machine.

Provide a space of the following dimensions for installation of the product.

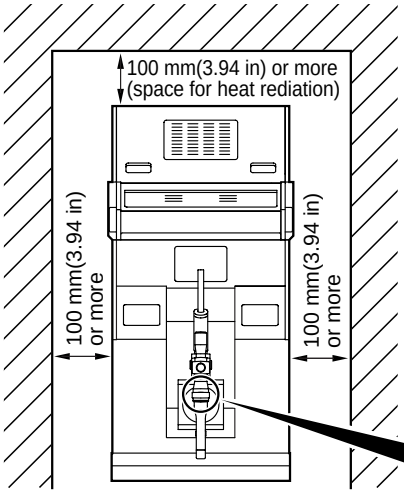

•Install the product more than 100 mm(3.94 in) away from the wall and other products.

Place the rifle unit to keep its scope away from direct sunlight or other strong light.

Follow the instructions below when carrying in this product with its units disconnected.

•To move the monitor unit, be sure to push it in either of the directions of arrow.

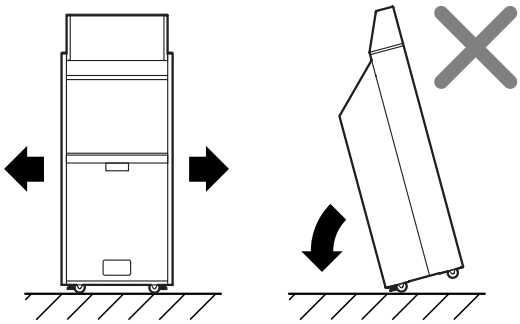

Never move the monitor unit tilted backward.
It is hazardous.

•When moving the monitor unit, be sure to push it along sideways (to the right or left). When moving it on a slope or getting it over a level difference, be sure to take the buddy system.

■ 安全使用注意事項

本書說明爲防止危害本產品的設置、使用、維護等人員及他人和財產的安全注意事項，本書內容務請遵守。

務　請　閱　讀

CHINESE

●本書使用如下標注，區分無視表示內容、錯誤使用時產生的危險和損害程度。

⚠ 警告	該項標注表示“有可能造成死亡或身負重傷”的內容。
⚠ 注意	該項標注表示“有可能造成傷害或物品損壞”的內容。

●本書使用如下圖標，說明務請遵守的內容種類。

⚠	本圖標表示“提請注意”的內容。
⃠	本圖標表示“禁止”的內容。
	本圖標表示“強制實行”的內容。

●經營本產品的店內維修人員和技術人員的定義

●本書中記載的說明中，凡指示爲由“店內維修人員”或“技術人員”進行的操作，必須由具有專門知識和技術的人員進行。

▶否則，將造成觸電或故障等重大事故。

▶交換本產品零件、維修檢查、以及處置發生的異常情況時必須由“店內維修人員”或“技術人員”進行。本書中，特別是有關危險的操作規定由“技術人員”進行。有關“店內維修人員”和“技術人員”定義如下：

什麼是店內維修人員？

・擁有娛樂機器、換錢機的維修經驗，在娛樂機器（本產品）的所有者和運營者的管理下，對娛樂設施或店內的機器進行日常的安裝、設置、檢查維修，交換裝置和消耗零部件等對機器整體進行維修管理的人員。

店內維修人員的工作內容

・安裝、設置、檢查維修娛樂機器和換錢機，交換裝置和消耗零部件。

什麼是技術人員？

・關機器設計、製造、檢查和維修工作的人員，以及具有，擁有電子、機械工學等專門技術知識，日常對娛樂機器進行維修管理和修理的人員。

技術人員的工作內容

・安裝、設置娛樂機器和換錢機，對電子部件和結構部件進行修理和調整。

設置時

⚠ 警告

●**本產品的設置、移動或搬運時，務必同當地的經銷店商洽。**
▶除專門人員以外，擅自設置、移動以及搬運本產品，將會導致產品損壞。
▶在設置本產品時，必須在地面設置六個支腳，平穩地放在地面。否則，不穩定的放置將會導致受傷或發生事故。
▶在設置本產品時，請不要對開關部位和可動部位癸分施加力量，否則將會導致受傷或發生事故，並導致產品損壞。

●**本產品爲室內用遊戲機，絕對不可設置在室外。**
▶如果設置在室外，將會導致發生事故或出現故障。

禁　止

●**請不要把本產品設置在建築物的緊急出口處。**
▶否則發生災害時人員無法避難，將會導致傷亡。

禁　止

●**此外，請不要把本產品設置在以下場所。**
▶否則將會導致發生事故或出現故障。
・漏雨或因潮濕結露的場所
・受直射陽光照射的場所
・直接受取暖用具等直接輻射的場所
・煤油、稀釋劑等引火性強的危險品附近
・傾斜以及強度弱的不穩定場所
・消防設備附近
・振動的場所
・灰塵集中的場所
・散發強烈磁氣和電波的機器附近

禁　止

●**本產品上側及附近，請勿放置裝水或藥品的器物。**
▶水分和異常物品進入內部時，將會導致觸電或發生故障。

禁　止

●**請勿在通風口附近放置物品。**
▶如果妨礙通氣，內部溫度上昇，將會導致發生火災或故障。

禁　止

●**請不要過分彎折或重壓電源軟線。**
▶否則將會導致發生漏電事故或火災。

禁　止

●**絕對不可用濕手插拔電源插頭。**
▶否則將會導致觸電。

禁　止

●**拔下電源插頭時，不要手持電源軟線。**
▶否則電源軟線破損，將會導致發生漏電事故或火災。

禁　止

CHINESE

CHINESE

設置時

⚠ 注意

●務必使用符合規格的電源。利用加長電線時，應使用符合規格的室內用線。
▶否則，將會導致發生火災或故障。

●務請使用附屬的電源軟線。
▶否則，將會導致發生火災或故障。

●請絕對不要使用多用插頭。
▶否則，將會導致發生火災或故障。

禁　止

●請不要將電源軟線，通信用纜線設置在可被人踩拉的通道上。
▶否則將會導致人員摔倒受傷，或軟線受到傷損。

禁　止

●本產品必須連接地線。
▶如果不連接地線，將會導致觸電或故障。

連接地線

●移動本產品時請不要過分用力。
▶否則將會導致發生事故或破損。

●移動本產品時，請不要手持來福槍裝置。
▶否則將會導致人員受傷或發生事故，裝置受到傷損。

禁　止

●設置本產品時，請距離牆壁和其他產品10公分以上。
▶否則，將會導致本體不能正常散熱，發生故障。

●請不要改變本產品的開關位置。
▶否則，將不能正常遊戲。

使用時

⚠ 警告

●如果本產品萬一發生冒煙、臭味或者異常聲響時、請立即關閉主電源開關，將電源插頭從插座上拔下，停止使用。
▶否則，繼續在異常狀態下使用，會導致發生火災和事故。

拔下電源插頭

發生異常情況時

1 關閉主電源開關
2 將電源插頭從插座上拔下
3 通知當地的經銷店

●請不要在電源插頭未正確插入插座或者堆積灰塵時放置不管。
▶否則將會導致觸電或發生火災，請定期進行檢查。

禁　止

使用時

⚠ 注意

●**本產品不可在商工業地區以外使用。**
▶如果在住宅地區或與其相鄰的地區使用，將會影響電視機、收音機和電話機等接受信號。

禁　止

●**請以下人士不要進行遊戲。**
▶否則將會導致發生事故或病癥、以及致使病癥嚴重，而且還將會導致裝置發生故障。

・飲酒者	・手持飲料食品者
・手臂、手腕和腰部有病癥或正在治療中的患者	

●**請不要撞擊玻璃面。**
▶否則將會導致發生意外事故或受傷。

●**絕對不可用濕手插拔電源插頭。**
▶否則將會導致觸電。

禁　止

●**使用電源軟線時，請遵守以下事項。**
▶否則將會導致發生漏電事故、火災或觸電。

・不可損傷	・不可加工	・不可過分彎折	・不可擰轉	・不可加熱
・不可拉拽	・不可捆綁	・不可用腳踩	・不可夾住或釘釘	

●**萬一發生電源軟線或電源插頭損傷時，立即停止使用，委託當地的經銷店更換零件。**
▶在破損狀態下持續使用，將會導致發生火災或觸電。

檢查和清掃

⚠ 警告

●**檢查或清掃本產品時，務請關閉主電源開關，將電源插頭從插座上拔下。**
▶否則將會導致觸電。

拔下電源插頭

●**交換零件或消耗零件時，必須使用本公司指定的零件，絕對不可使用其他零件或混用。**
▶否則將會導致發生火災或故障。

禁　止

●**本產品內部高壓危險，除技術人員外，不可打開背面門、側面門，並且打開時不可隨處觸摸。**
▶否則將會導致發生事故或觸電。

禁　止

●**打開背面門、側面門時，必須關閉主電源開關，將電源插頭從插座上拔下。**
▶否則將會導致發生事故或觸電。

拔下電源插頭

●**請不要對本說明書中未指定的部位進行分解、修理、各種設定或者改造。**
▶否則將會導致火災、動作失誤或故障等。需要修理等時，請委託當地的經銷店。
因對未指定的部位進行分解、修理、各種設定或者改造而導致的損害，本公司概不負責。

禁止分解

●**打開螢光燈蓋罩時，請小心謹慎。**
▶如果用力過猛，將會導致螢光燈破損等危險。

●**清掃本產品時，請使用浸有中性洗滌劑的軟布擰乾後進行擦拭。**
▶如果使用稀釋劑等有機溶劑或酒精等擦拭，會引起本體的變質。
▶如果本體內部浸水，將會導致觸電或發生故障。

CHINESE

CHINESE

移動、搬運時

⚠ 注意

●本產品裝設有顯示屏以及不抗震動的電子零件和精密零件，在移動、搬運時請小心注意。此外，絕對不可橫放。

●移動本產品前，務請關閉主電源開關，將電源插頭從插座上拔下，並將電源軟線，通信用纜線從本體上取下。
▶否則踩到或勾到電源軟線，將會導致發生事故或破損。

●移動本產品時，務必將六個支腳提高到最大限度，用腳輪移動。
▶否則將會導致發生事故或破損、故障。

●移動本產品時請不要過分用力。
▶否則將會導致發生事故或破損。

●移動本產品時，請不要手持來福槍裝置。
▶否則將會導致人員受傷或發生事故，裝置受到傷損。

●顯示器裝置根據推動方向會翻倒。移動時應面對屏幕向左右方向推動。在斜面或臺階處移動時必須由兩個人以上進行。
▶否則翻倒時造成事故和破損。

●移動本產時，不可強行向機體開關部位和可動部位施加過份的力量。
▶否則，可致受傷或事故，破壞機器本體。

禁　止

拔下電源插頭

禁　止

廢　棄

⚠ 警告

●廢棄處分本產品的來福槍裝置時，不可將瞄準鏡部位露出放置。
▶否則，會受直射陽光等影響造成火災。

禁　止

敬請遵守

●本產品的設置、使用、檢查、清掃、移動以及搬運的方法，請按照本書中記載的順序和內容安全進行。

●請不要撕去貼在產品上的“警告”和“注意”標簽。

●請不要在間接相當於警告或注意的條件下進行設置、使用、檢查、清掃、移動以及搬運。

●轉讓等變更本產品的所有權時，務請將本書轉交給新的所有者。

■ 警告標簽等的張貼位置

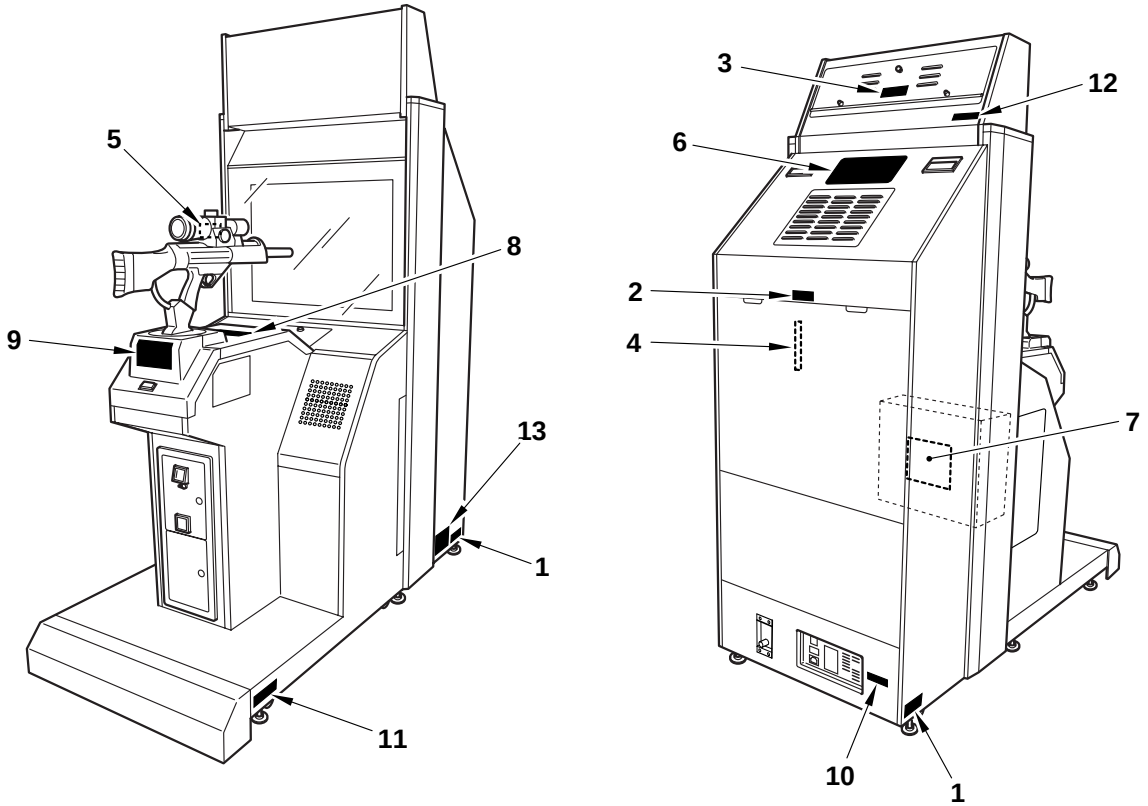

■警告標簽等的種類

1

⚠ WARNING

Ensure all leg levellers are securely set and game cabinet is level.

0000036360

2

⚠ WARNING

ELECTRICAL SHOCK HAZARD.
DO NOT OPEN EXCEPT
FOR SERVICE.

PN.0000032450

3

⚠ CAUTION

Do not open this door roughly.
The fluorescent lamps are fragile.

PN.0000049568

4

⚠HAZARDOUS VOLTAGE ⚠HAZARDOUS VOLTAGE

PN.0000048870

5

⚠高電圧危険
⚠HAZARDOUS VOLTAGE

PN.0000060522

6

⚠ 警告(けいこく) WARNING

悪い例／BAD!

良い例／GOOD!

押す方向によっては転倒する場合があります。
本ユニットを移動させるときは、必ず図の方向で
押してください。また、斜面を移動するときや段差を
乗り越えるときは、必ず2人以上で行ってください。

Unit may fall if you push or truck from the wrong side. To move the unit, please push as indicated in the picture. When moving it on a slope or getting it over a level difference, be sure to take the buddy system.

PN.0000061731

7

⚠注意（ちゅうい）CAUTION

分解禁止 技術者以外は絶対に分解しないでください。けがや故障の原因になります。
This product should be disassembled by qualified industry specialists only. Failure to obey this warning could result in product damage, accident and injury.

基板を取り外す前に、必ず電源を切り、基板に接続されているコネクターを抜いてください。故障や感電の原因になります。
Turn the power OFF and disconnect the power supply from the PCB before removing the PCB cage. Failure to do so could result in machine failure and electrical shock.

使用直後に基板カバーを開ける際は、基板上の部品が熱くなっていることがあります。取り扱いには注意してください。
Pay careful attention when openning the PCB cage soon after play, because the contents will be hot.

禁止 ケースの上や近くには、水や異品の入った容器や物を置かないでください。水分や異物が内部に入ると、感電や故障の原因になります。
Do not place containers holding chemicals or water on or near the game machine. Electrical shock or damage could be caused by water or foreign matter entering the inside of the machine.

禁止 濡れた手では触らないでください。感電することがあります。
Do not touch this with wet hands. Doing so could cause injury and electrical shock.

禁止 部品の交換は、必ず当社指定のものを使用してください。それ以外のものを使用したり流用することは絶対にしないでください。火災や異常作動、故障の原因になります。
When replacing parts, be sure to use parts of the correct specifications. Never use parts other than the specified ones. Using improper parts could result in fire,malfunction or equipment failure.

PN.0000060408

8

⚠ CAUTION

- Do not place any objects here. They may be knocked off by the gun.
- To avoid injuries, please keep observers away from the guns while game is in play.

9

⚠ CAUTION

To avoid breaking the gun, please do not place any weight on it. Also, please do not touch the scope.

10

Weight 127kg(280.0lb)

PN.0000061731

11

Weight 110kg(242.5lb)

PN.0000049002

12

Weight 12kg(26.5lb)

PN.0000061697

13

MODEL	GQ931-TB SILENT SCOPE 2
POWER	110 V / 60 Hz
	215W(MAX)
MANUFACTURER	KONAMI CO., LTD.
DATE OF MANUFACTURE	January.2000
WEIGHT	249Kg (549.0lb)
SERIAL NUMBER	

KONAMI®
MADE IN JAPAN
INDOOR USE
PN.0000073091

・以上標注內容僅爲示例。不同輸出地區，其標注內容有所不同。

CHINESE

1 規　　格

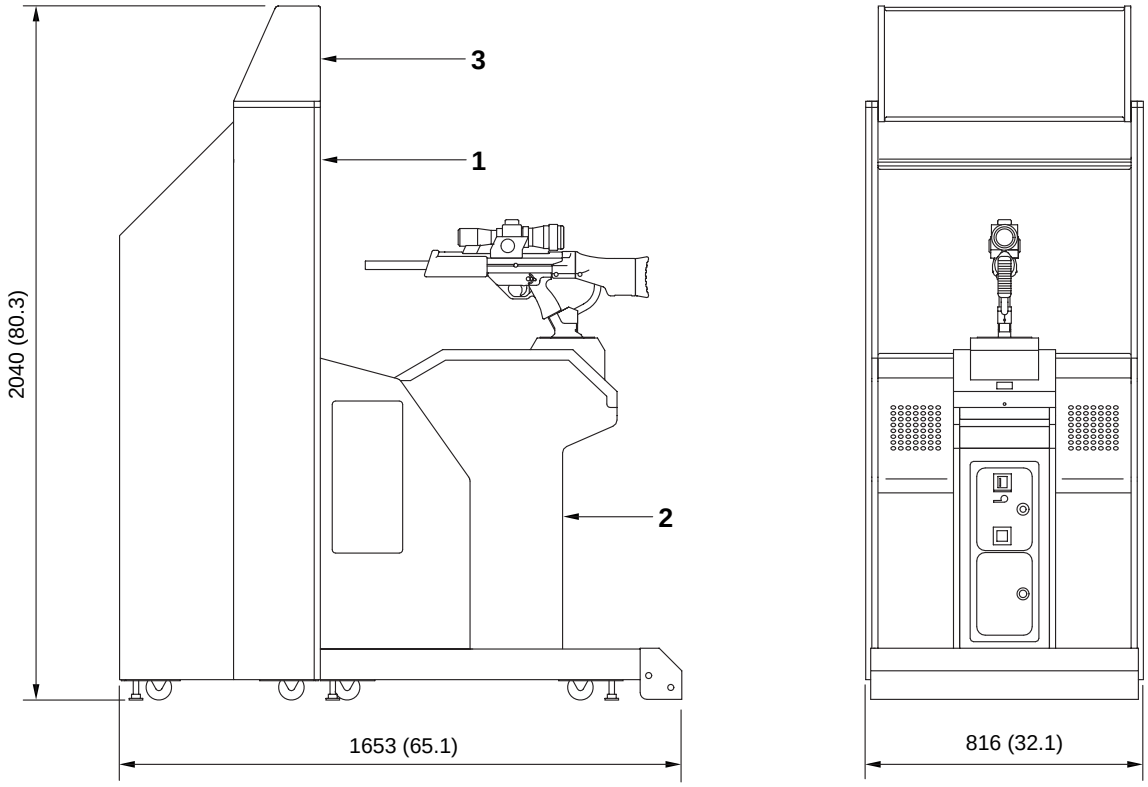

規　　格

外形尺寸	參閱上圖　mm(in)
重量	總重：約249kg (549lb) 1 顯示器裝置：約127kg (280.0lb)　3 標題裝置：約12kg (26.5lb) 2 來福槍裝置：約110kg (242.5lb)
額定消耗電力	・GQ931-TB：215W (MAX) ・GQ931-HD/SD : 170W (235VA)
顯示器	29英寸彩色顯示器(瞄準鏡部位：2英寸液晶顯示器)
使用條件	溫度10～35℃(50~95˚F)　濕度20～70%（不可結露）
附屬物品	・使用説明書 …… 本書 ・錢箱鑰匙 ……2 ・維修用鑰匙 ……2 ・電源軟線 ……1 ・通訊標簽 ……1 ・標題裝置 ……1 ・標題裝置安裝用螺絲(M6×15L) ……4 ・號碼標簽 ……1 ・L形扳手（維修瞄準鏡部位用）……1 ・通信用纜線 ……1

●萬一附屬品不全或發現其他次品時，請惠詢當地的經銷店。
●因提高產品性能等理由，本產品的規格不經預告可能有所變更。

CHINESE

■有關搬運與設置的尺寸

爲搬進本產品，門口需要以下的尺寸。

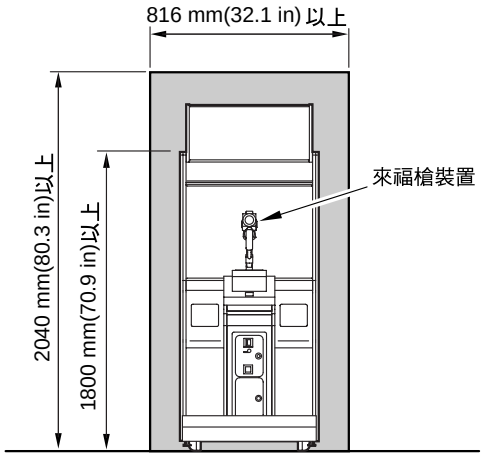

●移動本產品時請不要過分用力。
●移動本產品時，請不要手持來福槍裝置。

設置本產品時，請確保以下空間。

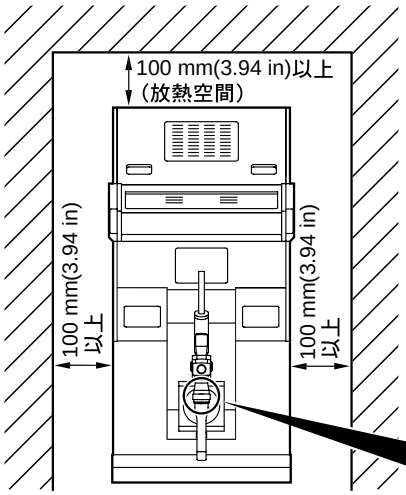

●設置本產品時，請距離牆壁和其他產品10公分以上。

請將瞄準鏡設置在沒有陽光或強光直射的地方。

將本產品分開搬運時，請遵守以下指示。

●顯示器裝置請務必向圖中所指示的方向推動。

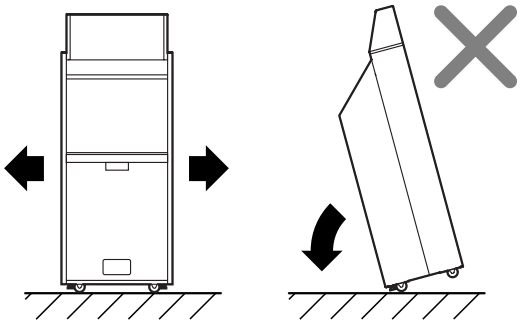

由於會產生危險，絕對不要向背面傾斜搬運。

●顯示器裝置根據推動方向會翻倒。移動時應面對屏幕向左右方向推動。在斜面或臺階處移動時必須由兩個人以上進行。

CHINESE

2 Names of parts

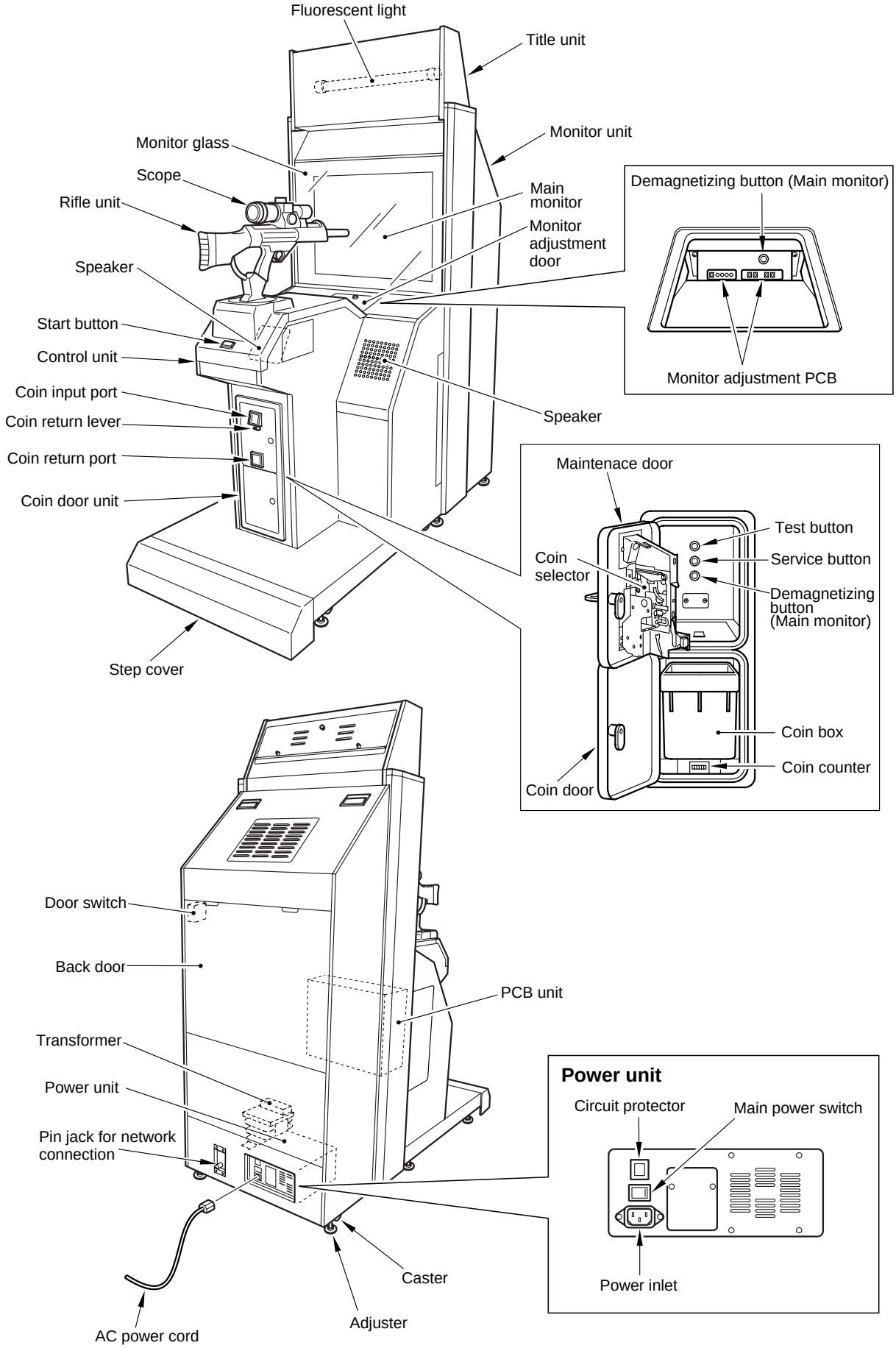

3 How to play

The “INNOCENT SWEEPER SILENT SCOPE 2 ™” gun shooting game is for you to look into the rifle unit’s scope and snipe at enemy characters. Looking through the scope, you can find images in the distance, in the dark, through X rays or by heat-sensitive means, which cannot be pinpointed on the main monitor screen. You are challenged to find out a target quickly and shoot at it precisely at the first fire.

How to play

1 Put coin(s) into the coin slot and press the start button.

2 The networked-play select screen shows up. In less than 10 counts, move the rifle unit to select the networked-play (accepted) or the solo play mode and pull the trigger to enter the mode. (To enter the mode, you can press the start button instead.)
The player who can select the networked-play mode is set by the “LINK PLAYER SELECT” item on the “GAME OPTIONS” screen on page 30.

3 The play mode select screen shows up. In less than 10 counts, move the rifle unit to choose from the following modes and pull the trigger to enter the mode. (To enter the mode, you can press the start button instead.)

- **Shooting range mode ....** The player tries to get the highest score possible within a specified time in the firing range.
- **Story mode .....** A story progresses in which you come to the rescue of the missile and hostages from a terrorist group.
- **Duel mode** ..... (competitive play) The player tries to find a competing player or the CPU within a specified time. By the round-by-round match play rules, the player who has taken all the life points wins the game. (How many life points to take depends on where to hit on the target.) There are 3 courses: CITY, FOREST and AIR.

In any game mode, you can join the networked-play or the ongoing play halfway.
(Note that you cannot join the game if the first player has selected the “SOLO” mode.)

4 Once a play mode has been selected, the game gets started automatically.

- Watch for an enemy on the main monitor screen, and looking through the scope, shoot at it. The rifle is loaded with 5 bullets and can also be automatically reloaded no matter how many times (the duel scene and the final scene not included).
- If you hit anyone but the enemies, you get a penalty and lose one of your life points.
- When you find a woman (appearing in nurse or army uniform) through the scope, you gain one life point.
- When you find a butler inviting you for a tea break through the scope, your time is prolonged.
- In the story mode, there are two ending styles: happy ending and bad ending.

5 The game is over when you have been attached and lost all your life points or when the game time is up.

Setting the hit effect at gunning down of an enemy

- There are some levels of a hit enemy’s hit effect to choose from. (Refer to “GAME OPTIONS” screen on page 30.)

Continuing the game

- You can continue the game if you take the procedure within 10 counts (about 20 seconds) when the game is over. Some scenes are impossible to continue the game.

Networked play

- When two machines are networked, the networked-play mode can be selected.
- Put the coin(s). Within 10 counts, select the networked-play mode (accepted) or the solo play mode and pull the trigger to enter the mode. (To enter the mode, you can press the start button instead.)
- Various settings for the duel (competitive play) mode are referred to in “GAME OPTIONS” on page 30.

Joining the game halfway

- You can join the game halfway except the combat scene and the final scene.

4 Opening and closing the doors

4-1 Opening and closing the maintenance door

How to open the maintenance door

- **Take care not to apply any load or impact to the maintenance door when it is open.**
- **After closing the maintenance door, be sure to check that the door is locked securely.**

1 Insert the accompanying maintenance key and turn it clockwise.

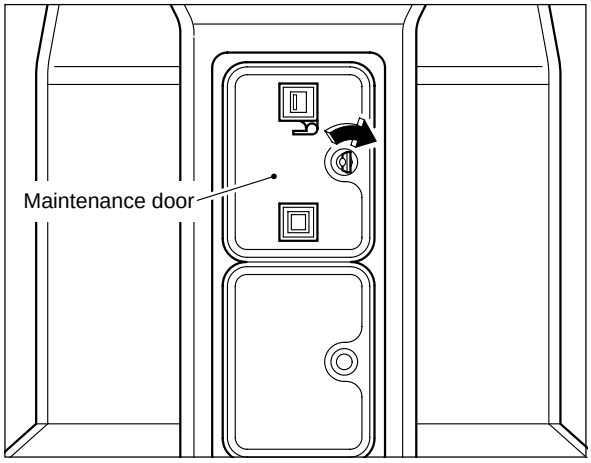

2 Open the maintenance door.

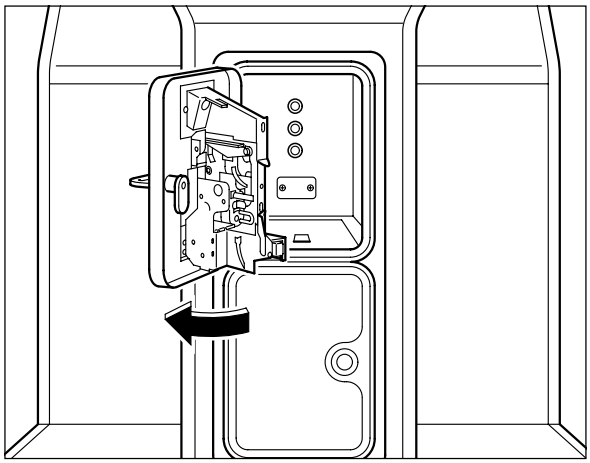

How to close the maintenance door

1 Close the maintenance door.

2 Turn the maintenance key counterclockwise and draw it out.

4-2 Opening and closing the coin door

Opening and closing the coin door and removing the coin box

•Take care not to apply any load or impact to the coin door when it is open.
•Securely lock the door for protection against burglaries.
•Note that the coin box is considerably heavy to take out if it is full of coins.

1 Insert the attached coin door key in the coin door and turn it clockwise.

2 Open the coin door and take out the coin box.

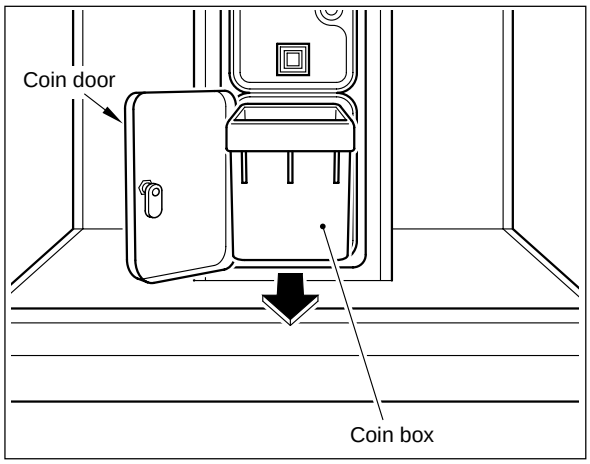

Coin counter

You will find the coin box when the coin door is opened.
The coin counter is located under the coin box.

•To move the coin counter onto the service panel, see page 45.

MEMO

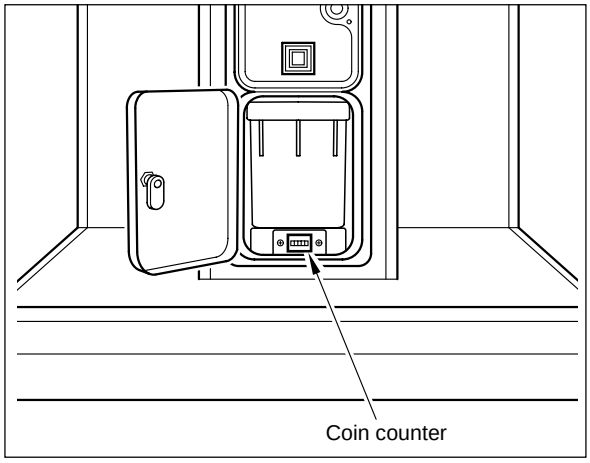

4-3 Opening and closing the monitor adjustment door

How to open the monitor adjustment door

•When opening the monitor adjustment door, be careful not to hit it against the monitor glass.
•When closing the monitor adjustment door, be very careful not to get your finger pinched by the door.

1 Insert the accompanying maintenance key and turn it clockwise.

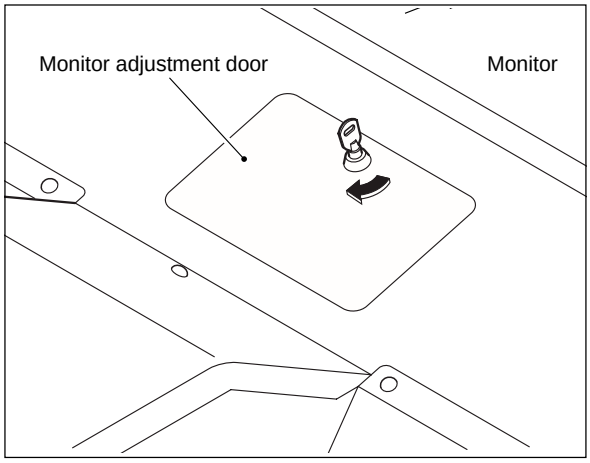

2 Open and detach the monitor adjustment door.

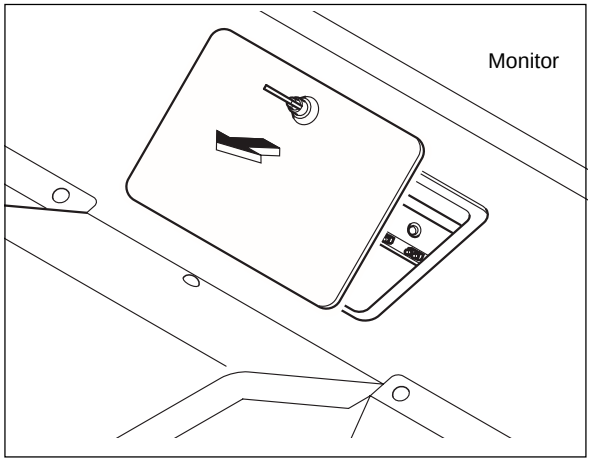

How to close the monitor adjustment door

1 Close the monitor adjustment door.

2 Turn the maintenance key counterclockwise and draw it out.

5 Networking game machines and game settings

5-1 How to networking

The kit's networked-play specifications allow two game machines to be connected. To network the machines, install them next to each other and connect the accompanying networking cable (2 m) to the network pin jack of the monitor unit.

- **When using the game machine independently, do not connect anything to the pin jack for network connection.**
- **The network connection pin jack is dedicated to the "INNOCENT SWEEPER SILENT SCOPE 2TM"machine. Never use it for any other game machines and audio-visual equipment. Be sure to employ it to interconnect the same "INNOCENT SWEEPER SILENT SCOPE 2TM" machines.**
- **Be sure to use the accompanying networking cable.**
- **When the networking cable has been connected, make the "NETWORK ID" setting (see "NETWORK OPTIONS" on page 32) and then check the setting in "NETWORK CHECK".**

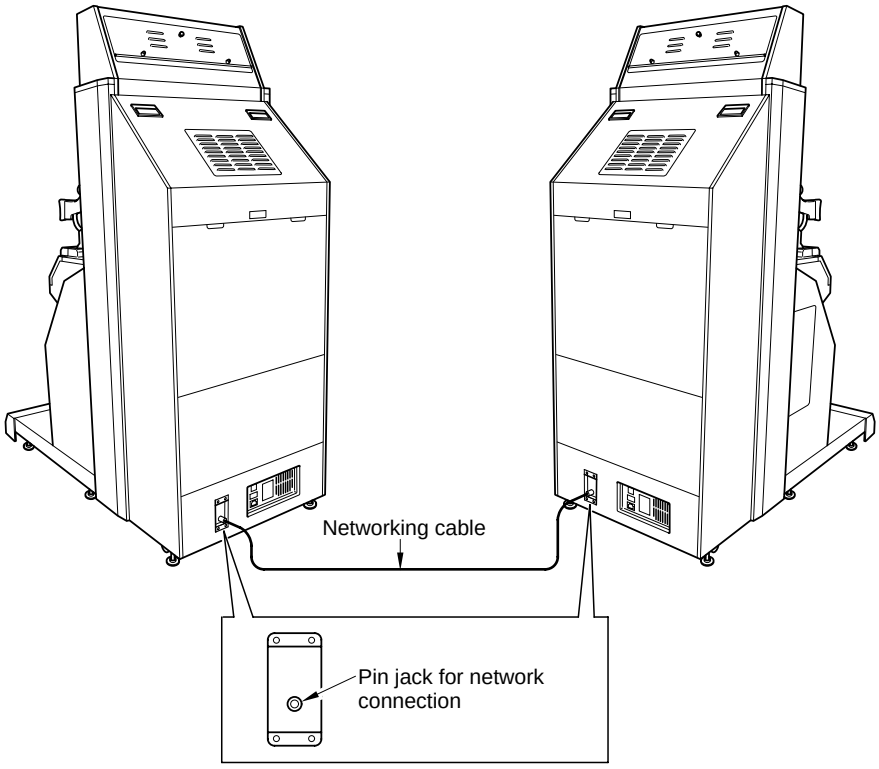

5-2 Checking the game performance

■ When the main power switch is turned ON after installation of machine, the game Printed Circuit Boards (PCB) is checked automatically and the result is displayed on the screen.

•Be sure to check the PCB unit (self test) before using the machine.
•Once the main power switch has been turned on (while the PCB unit is being checked), never touch the rifle unit until the demonstration game gets started.
•Preferably turn OFF the main power switch while the LCD screen of the scope is off (this happens if the game is not played for longer than 30 seconds) in order to prolong the product service life.
•Do not change the DIP switch setting of this product to other than factory setting.
•If an abnormality persists or the machine does not operate properly, immediately turn OFF the main power switch, unplug the power cord from the receptacle and contact your nearest dealer.

■ Result of test

If test is OK

·The machine goes to the game mode and the demonstration game gets started.

If any abnormality is detected

· “BAD” appears on the screen, and the checking is repeated.

After the installation of this product or when the PCB unit has been repaired or replaced, turn ON the power switch while pressing the test button of the service panel to initialize the setting once to the original factory setting.
At this time, keep pressing the test button until “BACKUP DATA INITIALE COMPLETE/SCOPE SCREEN ADJUST DATA/GUN SETTING DATA/OPTION SETTINGS/RANKING DATA/BOOKKEEPING INCOME DATA/PLEASE RELEASE TEST SWITCH” appears.

Never turn ON the power switch while holding down the test button. All the “BOOKKEEPING” data will be erased. (The data once erased can not be resumed.)

If an abnormal display continues or the machine does not operate normally, immediately turn OFF the main power switch, unplug the power cord from the receptacle and contact your nearest dealer.

■ On-screen message at power on

When the machine is powered on for the first time after installing, the following screen shows up. Set the current time correctly on the “BOOKKEEPING” screen. (See page 35.)
This message will not be displayed after you set the time unless you clear the “BOOKKEEPING” data.
To change the game mode without setting the time, please select “GAME MODE” from the main menu in the test mode. Then this message will be displayed every time you switch on the main power.

[CLOCK]
PRESS TEST SWITCH to MANUAL TEST MODE

5-3 Setting and adjustment of game mode

Manually check and change the settings for the screen displays and game contents and change them as reguired.

Starting the test mode

1 Turn ON the main power switch.
2 While the demonstration game is playing, press the test button on the service panel. (Do not turn ON the main power switch with the test button held down. The current settings as well as the BOOKKEEPING data will be erased and the machine will have the factory settings.)
·The main menu is displayed on the screen.

Quit the manual test mode

1 Pull the rifle unit's trigger to select "GAME MODE" on the main menu screen.
2 Press the start button.
·The screen goes back to the game mode.

Main menu screen (basic items)

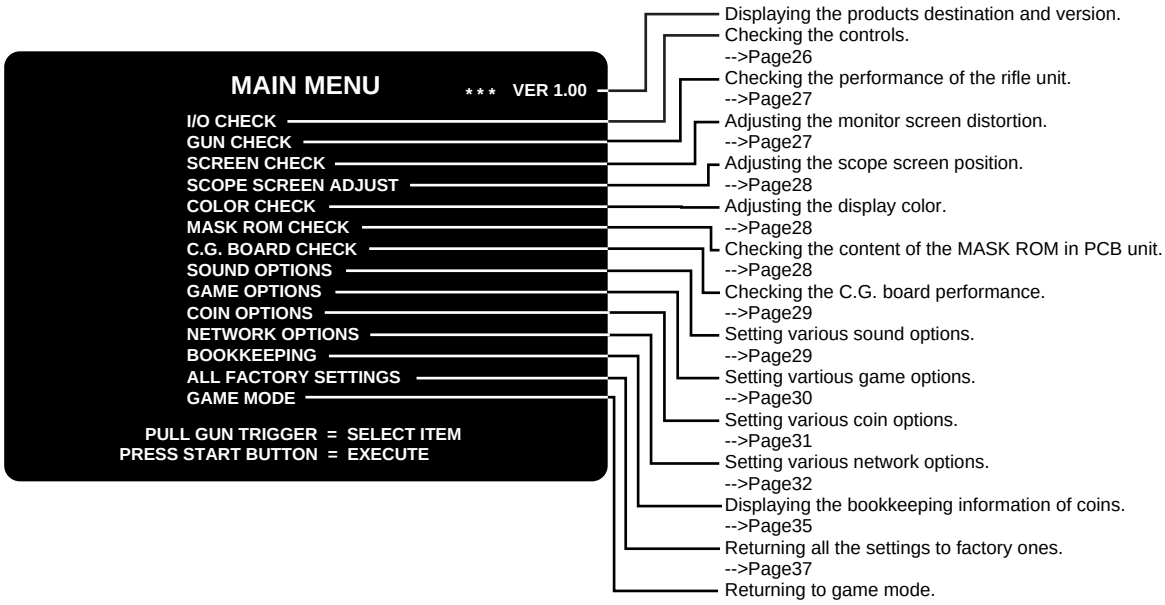

•If an error happens in "SCOPE SCREEN ADJUST DATA" or "GUN VOLUME DATA" at the start of the machine, a triangular marker is displayed at the error item. Pick up the item and make new settings. The "GAME MODE" item does not appear until those settings are properly made. This means the game cannot be played.

MEMO

Selecting each mode

How to select each mode from the main menu.
·SELECT --> Pull the rifle unit's trigger.
·SET --> Press the start button.
After selecting a mode, refer to the page on which that mode is described in details.

5-4 Mode descriptions

■ The original factory settings are displayed in green; the changed settings are displayed in red.

·Pull the rifle unit's trigger to select a setting to be modified, and press the start button to change the setting.

·After the setting has been changed, select "SAVE AND NEXT" and press the start button for entry.
"NOW SAVING" will appear, the modified settings will be saved, and the screen returns to the main menu.

·If "EXIT" is selected after the modification of the settings, the following message will appear.
"YOU DID NOT SAVE. DO YOU WANT TO SAVE? YES/NO" select "YES" or "NO".
Pull the rifle unit's trigger to select "YES" or "NO". Press the start button for entry.
If "YES" is selected, the new settings will be saved with "NOW SAVING" displayed and the screen will return to the main menu.
If "NO" is selected, the message "NO MODIFY SETTINGS" will appear, the modified settings will not be saved, but the main menu will show up again on the screen.

•If "FACTORY SETTINGS" is selected and the start button is pressed, all the settings of the mode will go back to the factory ones.
•If "DEFAULT SETTINGS" is selected, the settings of the mode will become the default ones.

MEMO

I/O CHECK

Checking the controls

■ Mode for checking the performance of the controls.
To return to the main menu screen, pull the rifle unit's trigger and press the start button at once.

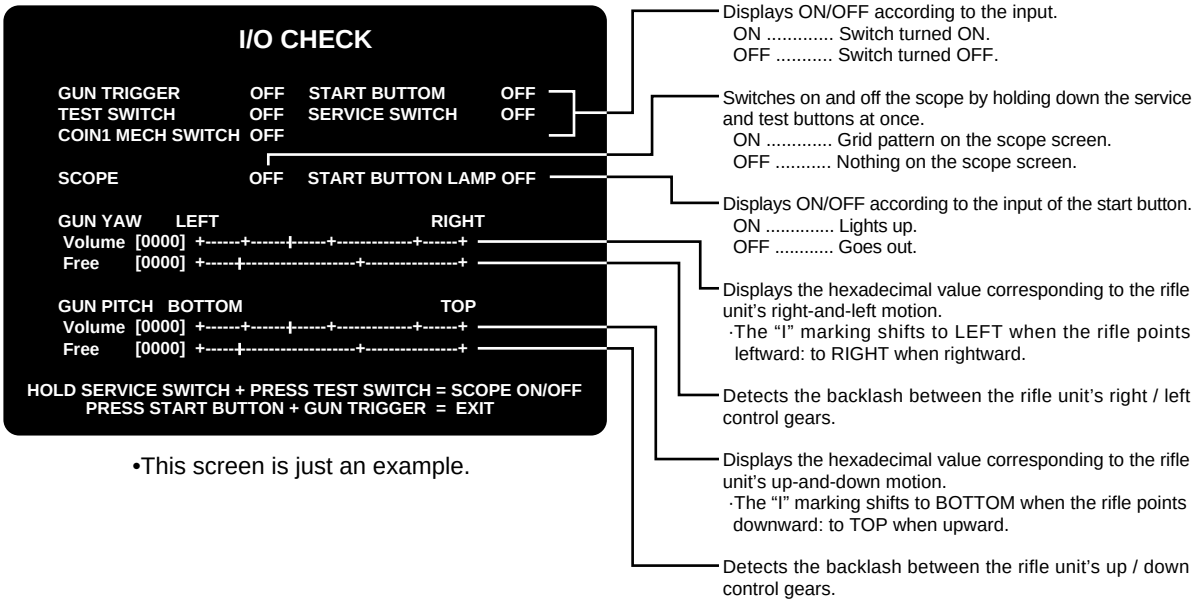

•This screen is just an example.

GUN CHECK

Checking the performance of the rifle unit

■Mode for adjusting and checking the rifle unit's swing range.
Look at the screen for the marker that the gun barrel is pointing to. If the marker is extremely out of position, press the test button on the service panel to call the gun adjustment mode.
To return to the main menu screen or interrupt the gun adjustment mode, press the start button.

Gun check mode

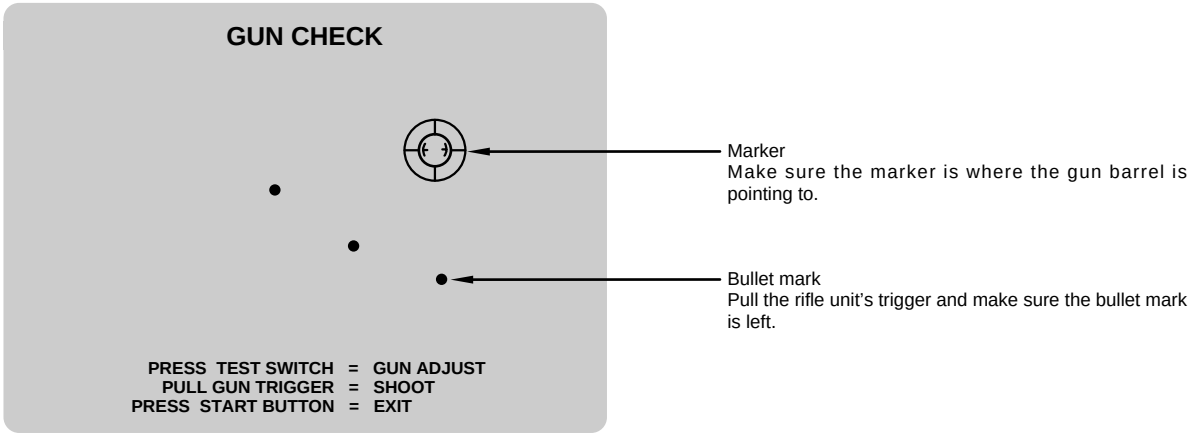

•This screen is just an example.

Gun adjustment mode

This mode is intended to adjust the pinpointing of the rifle unit. Take the following adjustment procedure.

1 Point the gun barrel to the lower-left corner of the screen, and pull the rifle unit's trigger.
2 Point the gun barrel to the upper-right corner of the screen, and pull the rifle unit's trigger.
3 The "NOW SAVING" message appears and the settings will be saved. Then the "GUN CHECK" screen shows up again. Move the rifle unit and make sure the marker is in position.

•If an error happens in "GUN VOLUME DATA" at the start of the machine, the "Gun adjustment mode" screen shows up itself.
•No image appears on the scope while in the "Gun check mode" and "Gun adjustment mode".

MEMO

SCREEN CHECK

Adjusting the monitor screen distortion

■Mode for checking the monitor screen display.
Adjust the focus, distortion and size of the image on the screen while watching the crosshatch pattern. Use the monitor adjustment PCB (See page 60) to make adjustments.
To return to the main menu screen, press the start button.

SCOPE SCREEN ADJUST

Adjusting the scope screen position

■Mode for adjusting the display position on the scope screen.
Pull the rifle unit's trigger to select an item. Press the start button to modify the setting.
Looking into the scope, adjust so that the crosshatch pattern be centered.
To return to the main menu screen, select "SAVE AND EXIT" or "EXIT" and press the start button.

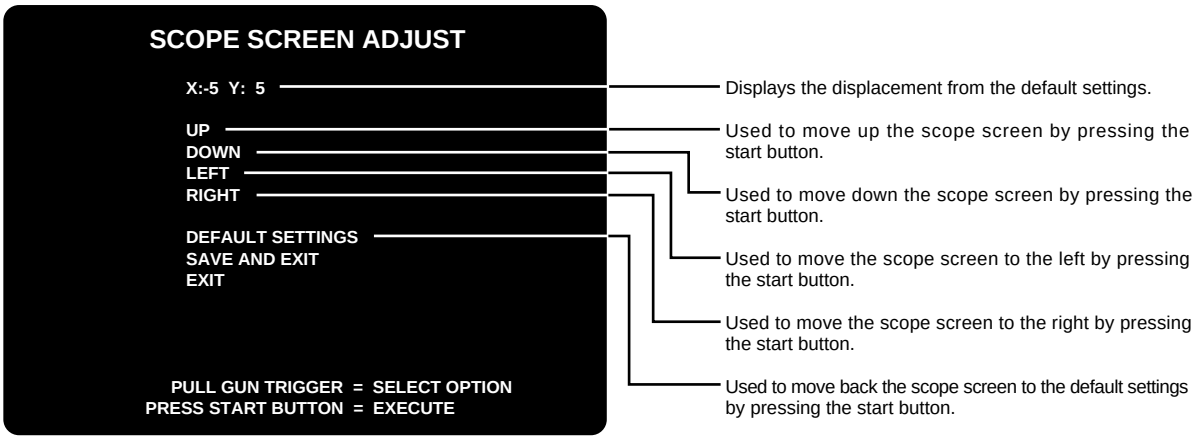

•This screen is just an example.

•The crosshatch pattern may appear slightly tilted on the scope screen. The game is not affected, however.

MEMO

COLOR CHECK

Adjusting the display color

■Mode for checking the display color.
Make the adjustment using the monitor adjustment PCB (See page 60) so that the colors of the color bars should appear properly graduated and the background should become black sufficiently.
To return to the main menu screen, press the start button.

MASK ROM CHECK

Checking the content of the MASK ROMs in PCB unit

■Mode for checking the MASK ROMs on the game PCB unit.
If the MASK ROMs is not in trouble, "OK" is displayed: if in trouble, "BAD" is displayed. Once in this mode, this checking gets started automatically. To return to the main menu screen, press the start button.

•If "BAD" is indicated, turn OFF the power switch and turn it ON again. If "BAD" still appears, write down the ROM number. And immediately turn OFF the main power switch, unplug the power cord and contact your nearest dealer.

C.G. BOARD CHECK

Checking the C.G. board performance

■Mode for checking the C.G. board function.
Check the function of the C.G. board by watching the motion on the screen in this mode to see if the board works normally or not.
To return to the main menu screen, press the start button.

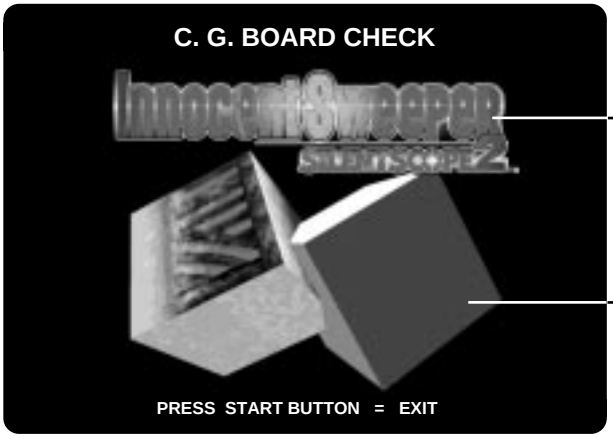

The product's logo mark flashes translucent here.
(The KONAMI logo mark appears on the scope.)

Two cubes are turning entangled each other behind the logo mark.

SOUND OPTIONS

Setting various sound options

■Mode for setting and checking the sound options.
Pull the rifle unit's trigger to select an item. Press the start button to modify the setting.
To return to the main menu screen, select "SAVE AND EXIT" or "EXIT" and press the start button.

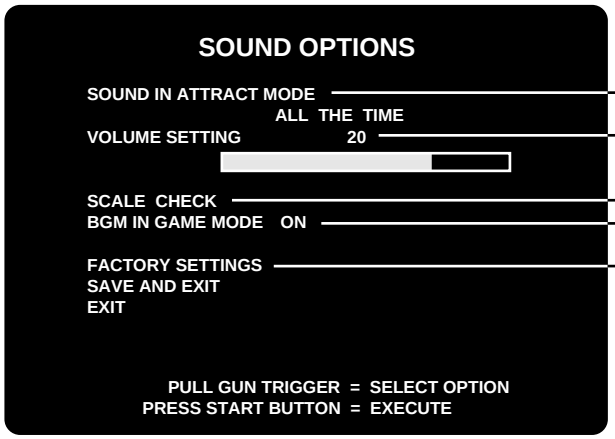

•This screen is just an example.

Turns on and off the demo play sound.
·ALL THE TIME.....Sound always on.
·ONCE EVERY 4 CYCLES ...Sound on every 4 cycles.
·COMPLETELY OFF .....Sound always off.

Adjusts the sound volume level of voice and sound effects in the range of 0 (mute) to 30 (maximum).
*To raise the sound level, press the start button.
*To lower the sound level, pass the start button so many times that the zero level is reached and make a new setting.

You will hear a do-re mi...do musical scale from the left speaker first and then from the right speaker, which is repeated twice.
(Sound effect is given for the 2nd round.)

Sets to give background music while the game is being played.
·ON ..... Background music heard.
·OFF ..... Background music not heard.

Press the start button to return all the settings to the factory settings.

GAME OPTIONS

Setting various game options

■Mode for setting and checking the game options.
Pull the rifle unit's trigger to select an item. Press the start button to modify the setting.
To return to the main menu screen, select "SAVE AND EXIT" or "EXIT" and press the start button.

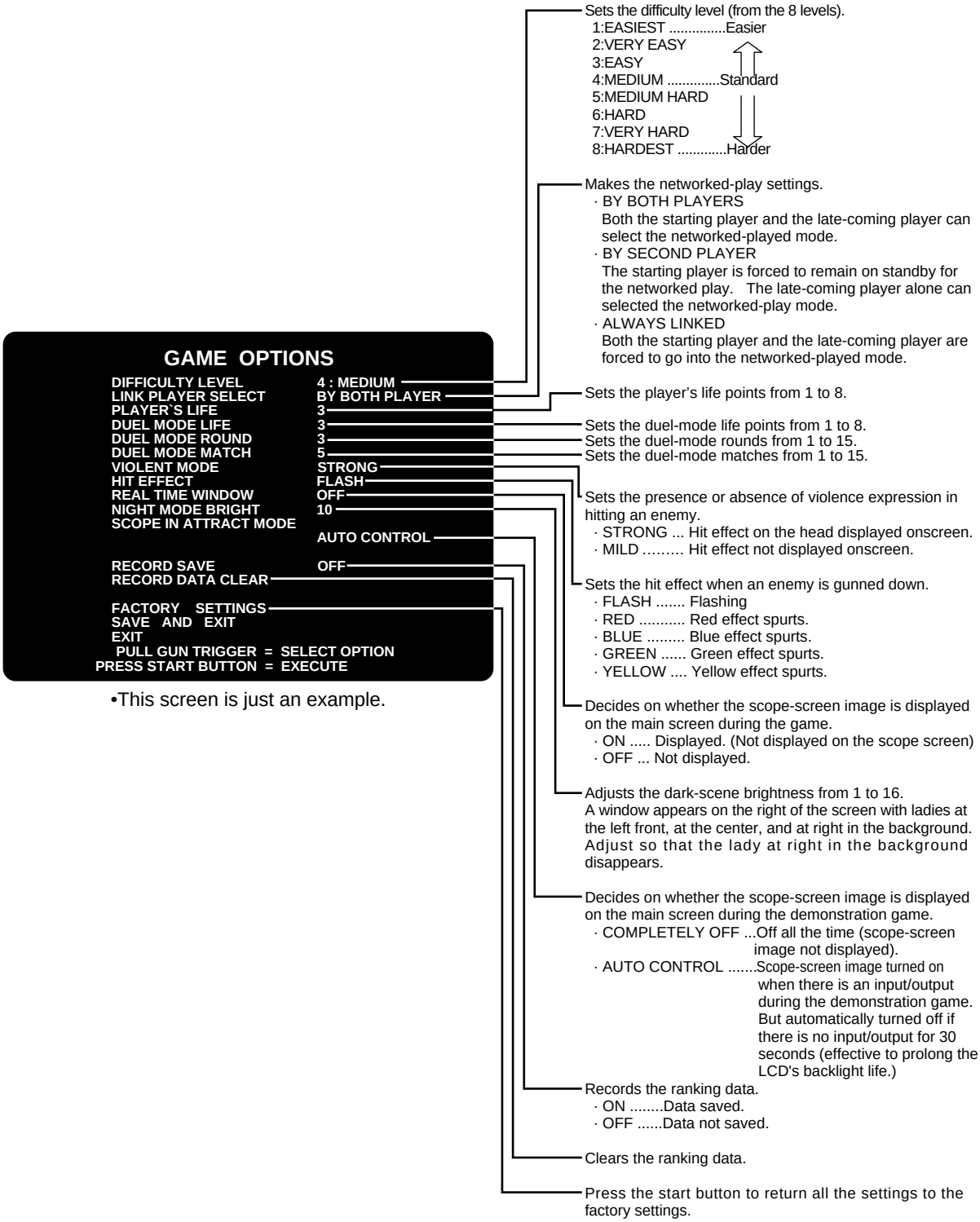

•This screen is just an example.

COIN OPTIONS

Setting various coin options

■Mode for setting and checking the coin options.
Pull the rifle unit's trigger to select an item. Press the start button to modify the setting.
To return to the main menu screen, select "SAVE AND EXIT" or "EXIT" and press the start button.

•The coin setting options are not displayed when "FREE PLAY" is set to "ON". In such case, remember the games will be free.

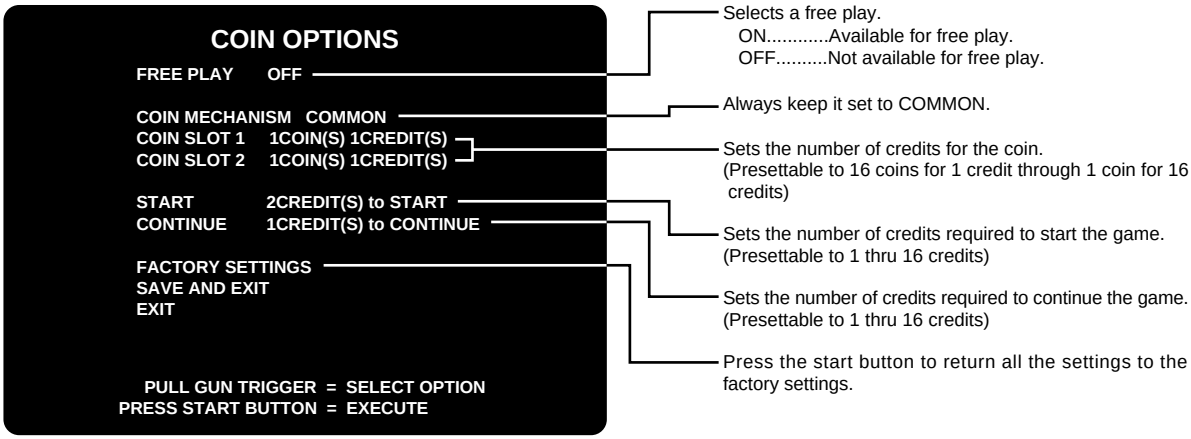

•This screen is just an example.

NETWORK OPTIONS

Setting various network options

■ This mode is used to set the network ID and to check the networking condition of each networked machine.
When the machines have been networked, be sure to check the networking condition on this screen.
Pull the rifle unit's trigger to select an item. Press the start button to modify the setting.
To return to the main menu screen, select "SAVE AND EXIT" or "EXIT" and press the start button.

•If any of the three items responds incorrectly, it indicates possible communication malfunction. Take measures while referring to Measures to be taken when there is a network abnormality on page 34.
•If the machine still shows the same trouble or any troubles that are not discussed in this manual, immediately turn OFF the main power switch, unplug the power cord and contact your nearest dealer.

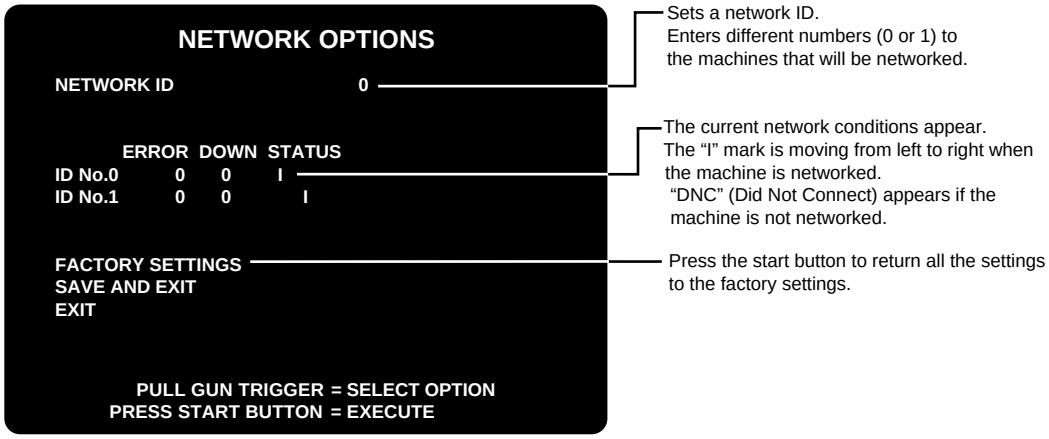

•This screen is just an example.

Check items (Watch the screen for longer than 1 minute and make sure the following 3 conditions are met.)
·Check that the "I" mark in the STATUS column is moving from the left to the right at a fixed speed.
·Check that the value in the ERROR column is below "10" after one minute.
·Check that the value in the DOWN column does not change from "0".

Screen display when game machines are networked

•When being networked

Screen for player 1

```
NETWORK OPTIONS

NETWORK ID                    0

        ERROR  DOWN  STATUS
ID No.0   0     0     I
ID No.1   0     0        I

FACTORY SETTINGS
SAVE AND EXIT
EXIT

        PULL GUN TRIGGER = SELECT OPTION
      PRESS START BUTTON = EXECUTE
```

Screen for player 2

```
NETWORK OPTIONS

NETWORK ID                    1

        ERROR  DOWN  STATUS
ID No.0   0     0     I
ID No.1   0     0        I

FACTORY SETTINGS
SAVE AND EXIT
EXIT

        PULL GUN TRIGGER = SELECT OPTION
      PRESS START BUTTON = EXECUTE
```

Measures to be taken when there is a network abnormality

Possible causes and measures to be taken

Possible causes	Measures
•The “Network ID” settings are improper.	·Readjust the “Network ID” settings on the “NETWORK OPTIONS” screen in the test mode. (See page 32)
•The networking cable is in trouble.	·Properly reconnect the networking cable between the machines. ·Replace the networking cable with new one.
•One of the networking cable has been disconnected from during play.	·1.Turn OFF the main power switch. 2.Connect the networking cable properly. 3.Turn ON the main power switch.
•One of the networking cable has been internally broken or broken.	·Replace the networking cable with new one. (You can also use commercially-sold video cable (75Ω3C-FV) having a length of 2m(78.74in) or less.)

BOOKKEEPING

Displaying the bookkeeping information of coins

■Mode for displaying the total data on the number of coins put in the machine.
If the time is preset on the “CLOCK SETUP” screen, the total data on the number of coins put into the machine can be checked for each coin slot.
Pull the rifle unit’s trigger to select “HOUR”, “MINUTE”, and “SECOND”. Press the start button to adjust the current time.
Make sure the current time is correct, select “SAVE AND EXIT” and press the start button. (The current time is now set and the main menu screen shows up.)

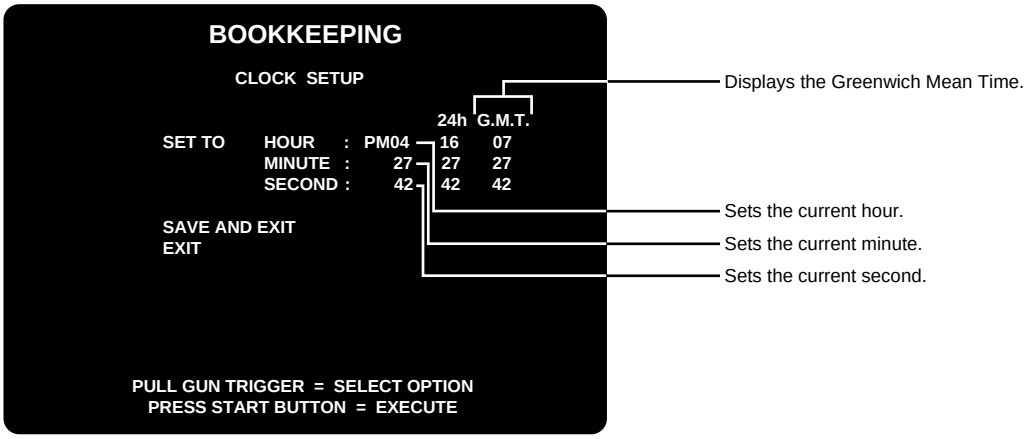

•This screen is just an example.

•If the time setting has not been made — for example, after the machine has been set up or initialized —, the “CLOCK SETUP” screen shows up.
•When the time setting has been modified, the bookkeeping information is automatically cleared. With the current time not set, the total of received coins and other bookkeeping data are not displayed. (The data once erased can not be resumed.)

MEMO

■When the time has been preset on the “CLOCK SETUP” screen as shown above, the following “BOOKKEEPING” information is displayed on the screen. Select “NEXT DATA SUMMARY” and press the start button, and the screen will switch in the following sequence. To return to the main menu screen, select “EXIT” and press the start button.

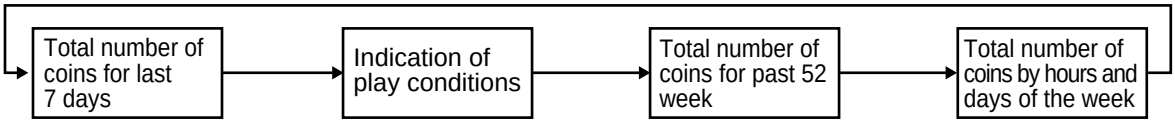

Also, when the current time has been set and “INCOME DATA CLEAR” has been selected and the start button pressed, the current time and BOOKKEEPING data can be cleared.
At this time, the question “DO YOU WANT TO CLEAR DATA? YES/NO” is indicated on the screen. Pull the rifle unit’s trigger to select “YES” or “NO”. If “YES” is selected, “NOW CLEARING” appears on the screen and the “BOOKKEEPING” data will be deleted. The data will be saved in the factory settings and the main menu screen will show itself up.
If “NO” is selected, “NO MODIFIED” is indicated and the main menu appears again without deletion of the data.

Screen of the total number of coins for last 7 days

```
BOOKKEEPING

INCOME DATA of LAST 7DAYS
                          SLOT1 SLOT2
TOTAL                      0     0
LAST 7DAYS AVERAGE         0     0
TODAY                      0     0
YESTERDAY                  0     0
-2DAY                      0     0
-3DAY                      0     0
  :
  :
-7DAY                      0     0

NEXT DATA SUMMARY
INCOME DATA CLEAR
EXIT

PULL GUN TRIGGER = SELECT OPTION
PRESS START BUTTON = EXECUTE
```

- Total number of coins after the time being set.
- Average number of coins of last 7 days.
- Number of coins of today.
- Number of coins of yesterday.
- Number of coins of 2 days ago.
- Number of coins of 3 days ago.
- :
- :
- Number of coins of 7 days ago.
- Goes to the next data.
- Clears the current time and the income data.

•This screen is just an example.

Screen of indication of play conditions

```
BOOKKEEPING

PLAY DATA SUMMARY

TOTAL ACTIVE TIME      0h 0m 0s
TOTAL PLAY TIME        0h 0m 0s
ACTIVITY RATE             0%
AVERAGE PLAY TIME      0m 0s
ONE TIME ONLY COUNT       0
CONTINUE COUNT            0
SOLD PLAY COUNT           0
STORY MODE                0
SHOOTIME RANGE            0
DUEL CITY                 0
DUEL FOREST               0
DUEL AIR                  0

NEXT DATA SUMMARY
INCOME DATA CLEAR
EXIT

PULL GUN TRIGGER = SELECT OPTION
PRESS START BUTTON = EXECUTE
```

- Displays the total active time since the time setting.
- Displays the total play time.
- Displays the activity rate (total active time ^ total play time).
- Displays the average play time.
- Displays the number of plays (continuities not included).
- Displays the number of continuities.
- Displays the total number of plays.
- Displays the number of story mode plays (continuities not included).
- Displays the number of shooting range mode plays.
- Number of plays in the city course in the duel mode.
- Number of plays in the forest course in the duel mode.
- Number of plays in the air course in the duel mode.

•This screen is just an example.

Screen of the total number of coins for past 52 weeks

```
BOOKKEEPING

COIN SLOT1 INCOME DATA of LAST 52 WEEKS

-01:00000  -02:00000  -03:00000  -04:00000
-05:00000  -06:00000  -07:00000  -08:00000
-09:00000  -10:00000  -11:00000  -12:00000
    :
    :
    :
    :
-49:00000  -50:00000  -51:00000  +52:00000

NEXT DATA SUMMARY
INCOME DATA CLEAR
EXIT

PULL GUN TRIGGER = SELECT OPTION
PRESS START BUTTON = EXECUTE
```

- Number of coins of 1 week before.
- Number of coins of 2 week before.
- :
- :
- :
- :
- Number of coins of 52 weeks before.
- Goes to the next data.
- Clears the current time and the income data.

•This screen is just an example.

Screen of the total number of coins by hours and days of the week

```
BOOKKEEPING

COIN SLOT1 INCOME DATA of WEEK

TIME  SUN  MON  TUE  WED  THU  FRI  SAT  TOTAL
0:00   0    0    0    0    0    0    0    0
2:00   0    0    0    0    0    0    0    0
4:00   0    0    0    0    0    0    0    0
  :
  :
  :
22:00  0    0    0    0    0    0    0    0
TOTAL  0    0    0    0    0    0    0    0

NEXT DATA SUMMARY
INCOME DATA CLEAR
EXIT

PULL GUN TRIGGER = SELECT OPTION
PRESS START BUTTON = EXECUTE
```

- Number of coins by hours and days of the week.
- Total number of coins by days of the week.
- Goes to the next data.
- Clears the current time and the income data.

•This screen is just an example.

ALL FACTORY SETTINGS

Returning all the settings to factory ones

■Mode for returning the test-mode settings to the factory settings.
Pull the rifle unit's trigger to select "YES" or "NO" and press the start button for entry.
If "YES" is selected, the question for re-confirmation appears on the screen.
If "YES" is selected again, the "NOW SAVING" message appears on the screen and the next test-mode settings are saved as the factory settings.

- **SOUND OPTIONS**
- **GAME OPTIONS**
- **COIN OPTIONS**
- **NETWORK OPTIONS**

If "NO" is selected, "NO MODIFY SETTING" is indicated. This means the modified settings are not saved.

6 Installation and assembling

6-1 Fastening the adjusters

How to fasten the adjusters

- **Adjust the adjusters so that the casters do not touch the floor. Take care not to exceed the maximum adjusting height of the adjuster.**
- **Make all the 6 adjusters come in contact with the floor, tighten them with hexagon nuts after making sure that all the units are placed stably in a horizontal position.**

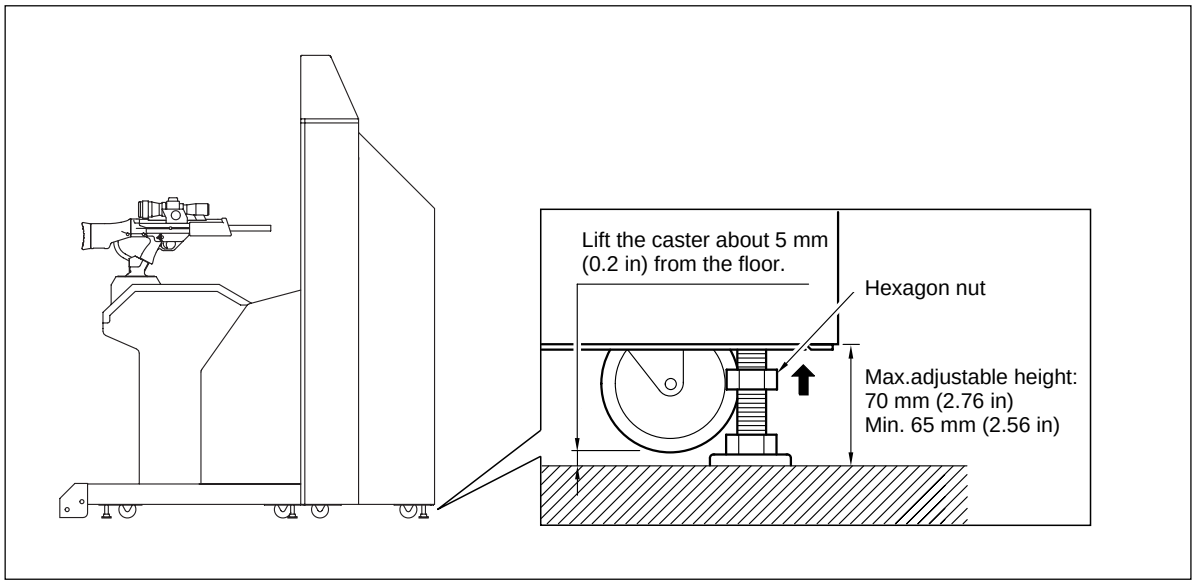

6-2 Installing the step cover

How to install the step cover

First make sure the machine is secured with the adjusters and then attach the step cover as shown below.

1 Remove the screws and detach the step cover.

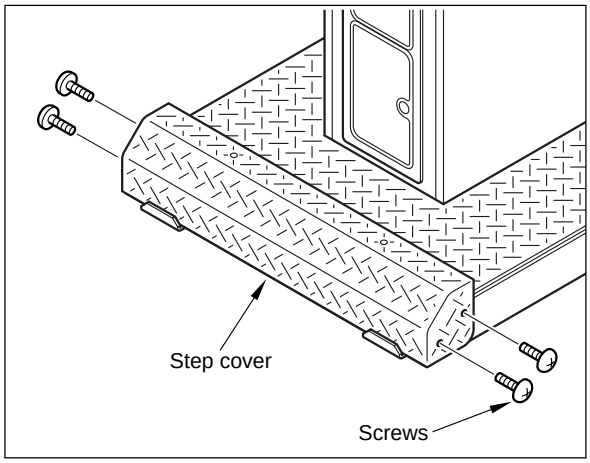

2 Place the step cover back in position and fix it with the above four screws. See the figure at right.

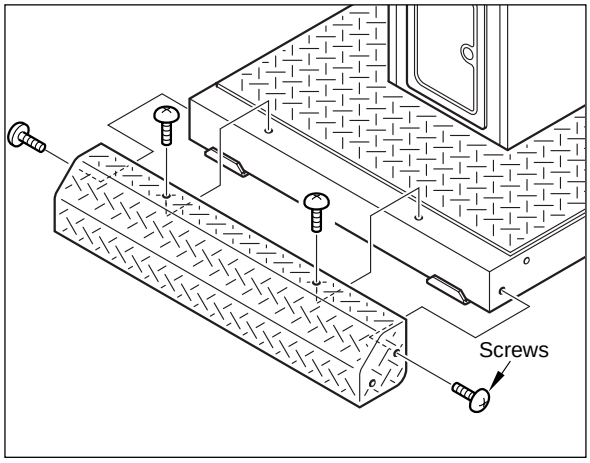

6-3 Installing the title unit

How to install the title unit

•Before installing the title unit, be sure to turn OFF the main power switch and unplug the power cord from the receptacle.
•Before installing the title unit, make sure the adjusters of the machine are tight on the floor.
•The title unit weights approx. 12kg(26.5lb). Be sure to make a team of 2 people or more and to use stepladders or the like for added safety.
•When connecting the title unit, take care not to catch the wiring and your hand between the unit.

1 Be sure to turn OFF the main power switch and unplug the power cord from the receptacle.

2 Connect all the specified connectors. Place the title unit on the monitor unit with care not to get the wires caught between them.

3 Fix the title unit with the accompanying title unit mounting screws.

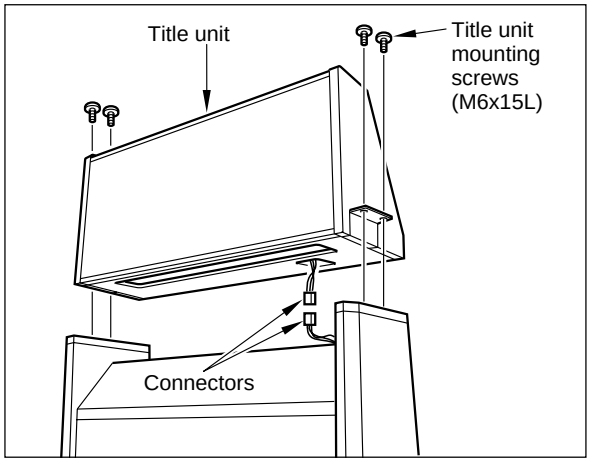

•When placing the title unit on the monitor unit, be careful not to get your hand and the wires caught between them.
•Fix each of the unit on the monitor unit and fix it by tighting the screws.

MEMO

6-4 Service panel

Service panel

Using the accompaying maintenance key, open and detach the maintenance door to access the service panel inside.

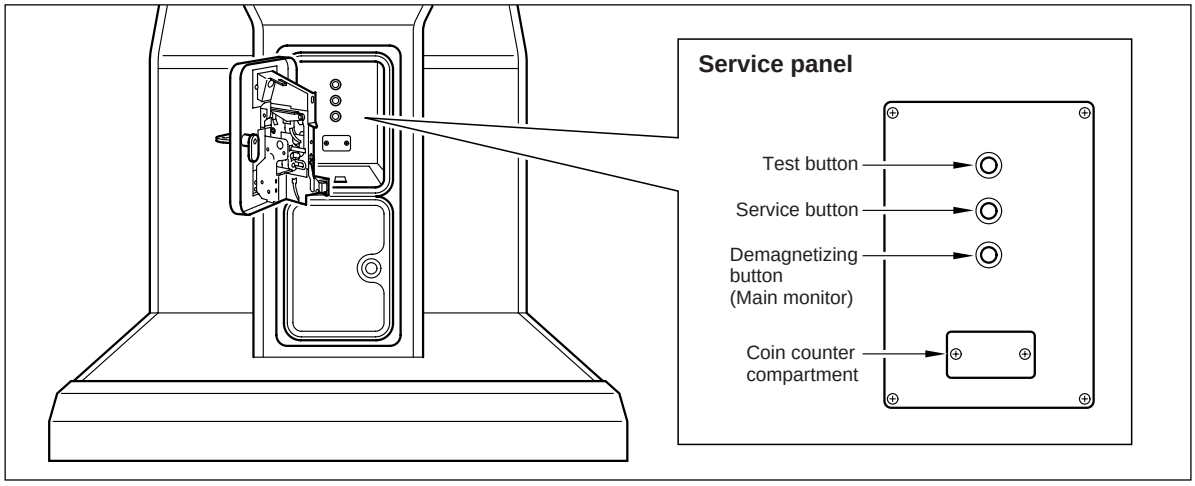

6-5 Power unit

Power unit

The power supply unit is provided at the rear side of the machine.

•Be sure to use the attached AC power cord.
•Be sure to ground to the machine. Never connect the grounding wire to gas pipe, water pipe or telephone ground terminal.
•There are high-voltaged parts inside the product. Other persons than qualified industry specialist should not open the back door and side door. When the back door and side door is opened, pay due attention not to touch the inside unnecessarily.
•When opening the back door and side door, be sure to turn OFF the main power switch and unplug the power cord from the receptacle.
•Preferably turn OFF the main power switch while the LCD screen of the scope is off (this happens if the game is not played for longer than 30 seconds) in order to prolong the product service life.

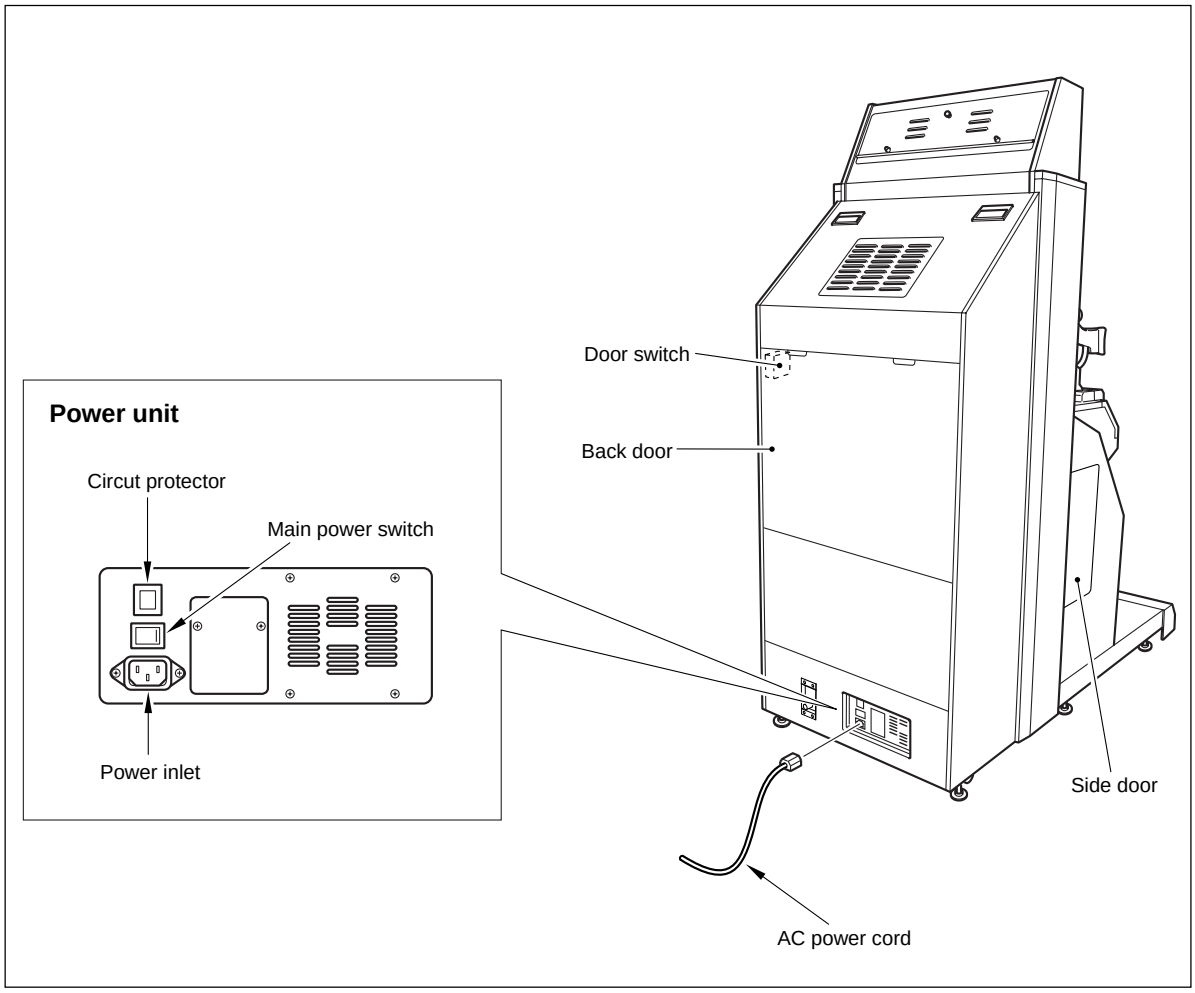

6-6 Separating the machine

How to separate the machine

The machine can be divided into the units.

- **Before separating the units from the machine, be sure to turn OFF the main power switch and remove the power cord plug from the receptacle.**
- **Before moving the machine, be sure to turn OFF the main power switch, unplug the power cord from the receptacle and remove the power cord from the machine.**
- **Before moving the machine, be sure to fully lift the six adjusters and move it on the casters.**
- **When moving the monitor unit, be sure to push it along sideways (to the right or left). When moving it on a slope or getting it over a level difference, be sure to take the buddy system.**
- **When connecting the separated units, take care not to catch the wiring and your hand between the units.**

How to separate the monitor unit and control unit

1 Be sure to turn OFF the main power switch and unplug the power cord from the receptacle.

2 Raise the six adjusters to let the casters come in contact with the floor.

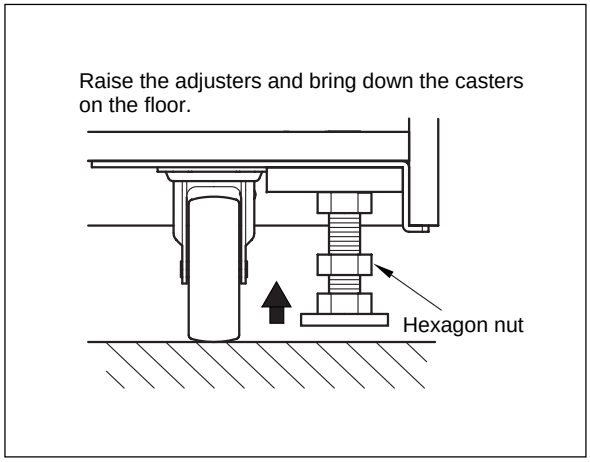

3 Detach the side door of the control unit (see at right).

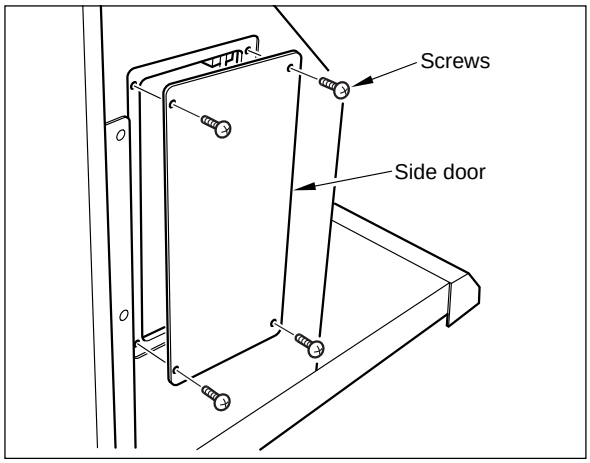

4 Disconnect the networking cable shown at right.

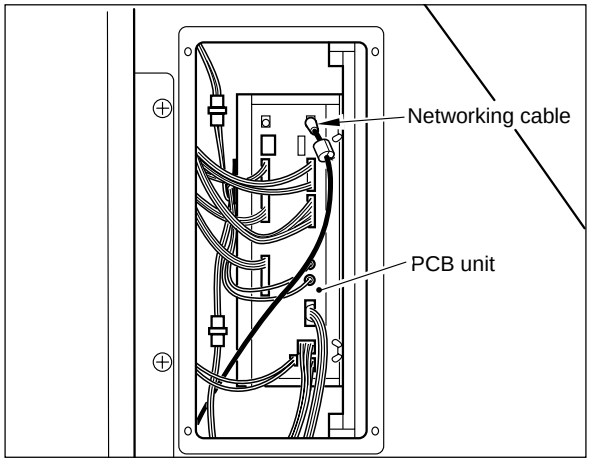

5 Unscrew the fixtures off both sides. Draw the units 100 mm (3.94 in) or shorter apart from each other.

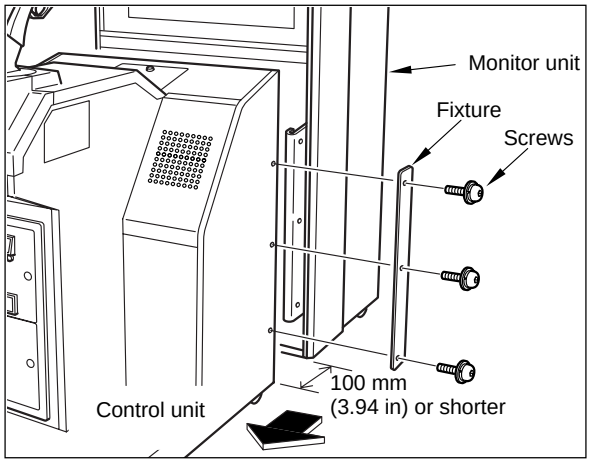

- Be careful not force the units too far from each other. The wires connected between the units may be damaged inside.
- Fix each of the unit on the monitor unit and fix it by tighting the screws

MEMO

6 Disconnect all the connectors.

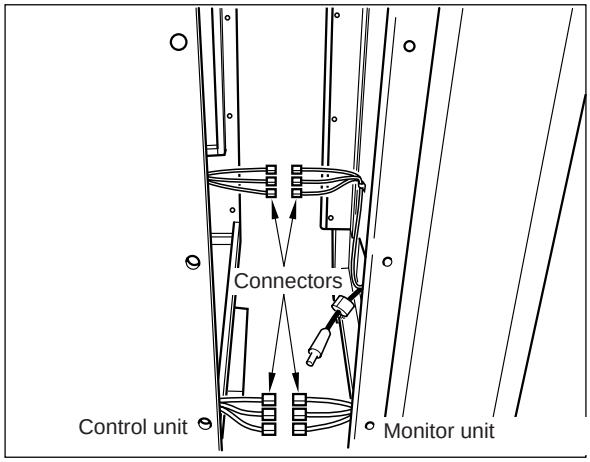

Separating the title unit

•Before separating the title unit, be sure to turn OFF the main power switch and unplug the power cord from the receptacle.
•Before detaching the title unit, make sure the adjusters of the machine are tight on the floor.
•The title unit weighs approx. 12 kg (26.5 lb). Be sure to make a team of 2 people or more and to use stepladders or the like for added safety.
•When reconnecting the title unit, take care not to catch the wiring and your hand between the units.

1 Be sure to turn OFF the main power switch and unplug the power cord from the receptacle.

2 Remove the lock screws off the title unit. Lift the title unit slightly and disconnect the connectors.

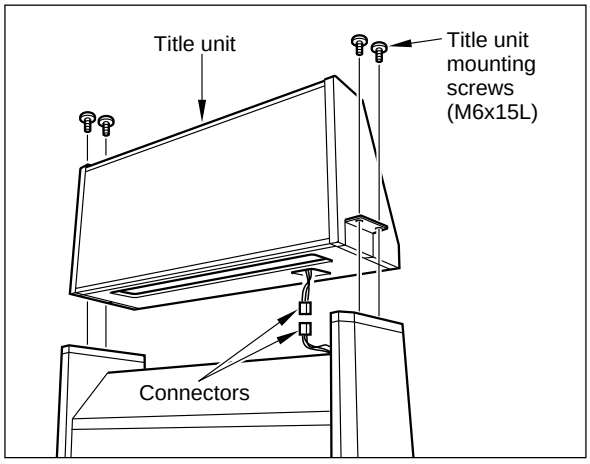

•Be careful not to force the title unit up too far. The wires connected may be damaged inside.

MEMO

6-7 Moving the coin counter

How to move the coin counter

The coin counter was installed in the coin box when the machine left the factory, but it can be moved onto the service panel.

•Before moving the coin counter, be sure to turn OFF the main power switch and unplug the power cord from the receptacle.

1 Be sure to turn OFF the main power switch and unplug the power cord from the receptacle.

2 Open the coin door and take out the coin box. Remove the screws and take out the coin counter.
In the meanwhile, disconnect the connectors.

3 Remove the maintenance door and unscrew the blind cover to remove it from the service panel.

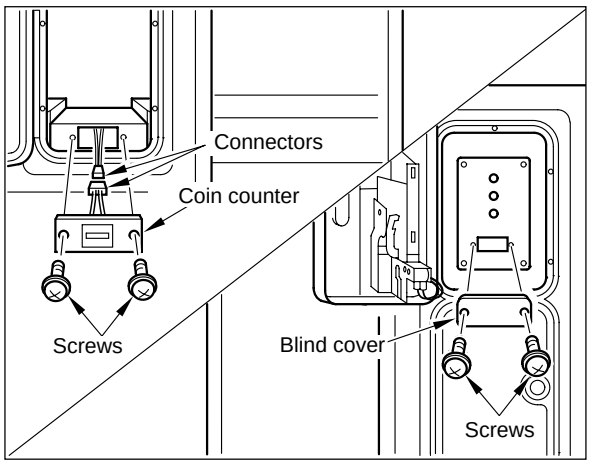

4 Draw the connector out of the opening of the service panel and connect this connector to the coin counter's connector.

5 Attach the coin counter on the service panel with the screws.

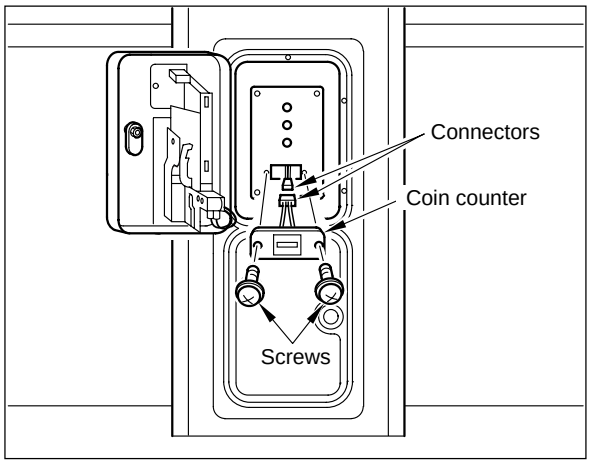

6 Attach the blind cover (detached in Step **3** above) back in position on the coin counter using the screws.

7 Place the coin box back into position and close the coin door.

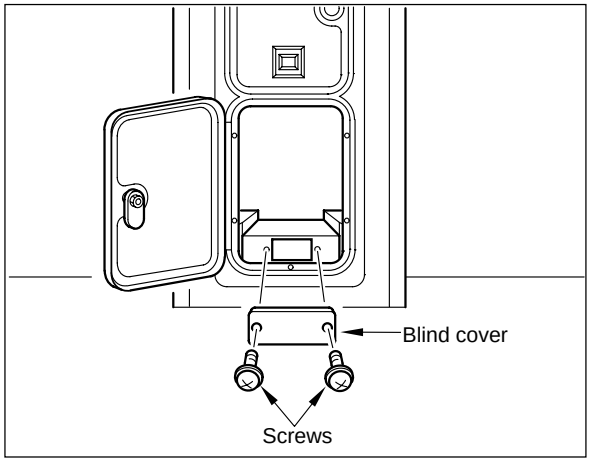

7 Maintenance

7-1 Replacing the coin selector

How to replace the coin selector

- **Before replacing the coin selector, be sure to turn OFF the main power switch and unplug the power cord from the receptacle.**
- **When replacing parts, be sure to use parts of the correct specifications. Never use parts other than the specified ones.**
- **Strictly refrain from disassembly and repair of parts which are not indicated in this manual, as well as settings and remodelling.**

1 Be sure to turn OFF the main power switch and unplug the power cord from the receptacle.

2 Open the maintenance door.

3 Release the levers that fix the coin selector. See at right.

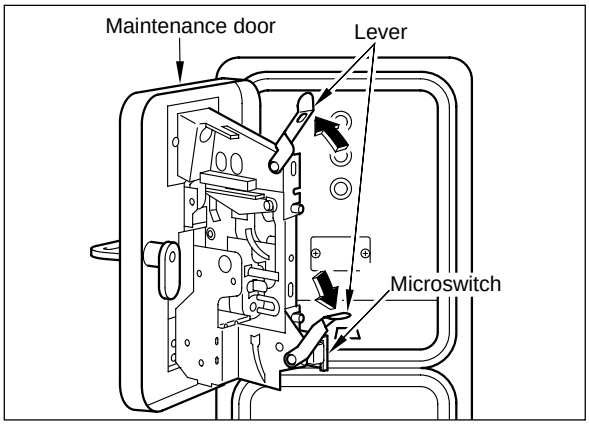

4 Slide the coin selector to the right, and take it out.

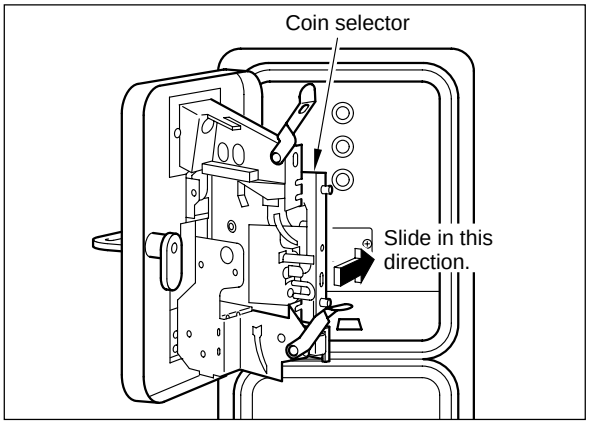

5 **To fit the coin selector again**

Fit the 2 projections of the coin selector to their mating notches.

6 Lock the levers (in Step **3** above) again, and close the maintenance door.

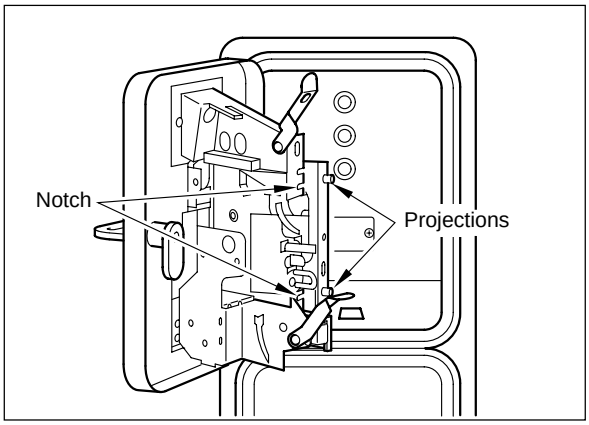

7-2 Replacing the fluorescent light

How to replace the fluorescent light

•Before replacing the fluorescent light, be sure to turn OFF the main power switch and unplug the power cord from the receptacle.
•Gently open the fluorescent light cover.
•The florescent light is hot just after the power switch is turned off. Wait until it cools down and then replace it with a new one of the same type (straight tube 20W / 100V).
•When replacing parts, be sure to use parts of the correct specifications. Never use parts other than the specified ones.
•Strictly refrain from disassembly and repair of parts which are not indicated in this manual, as well as settings and remodelling.

1 Be sure to turn OFF the main power switch and unplug the power cord from the receptacle.

2 Remove the screws off the back cover (see at right). Hold the knob and gently open the cover.

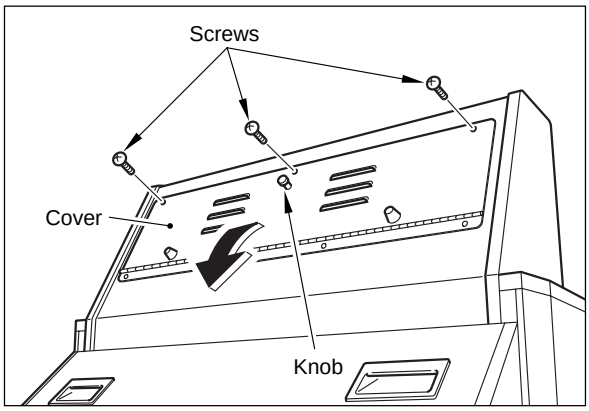

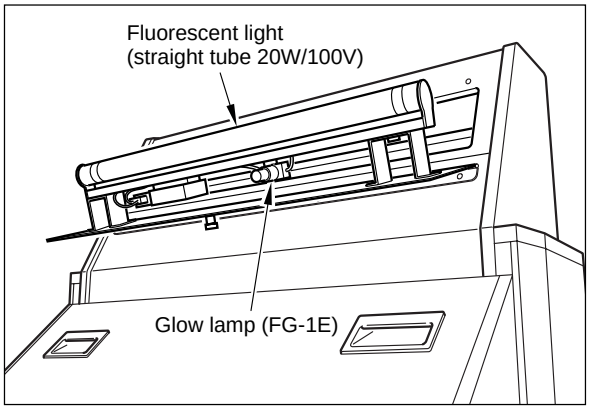

3 Push one end of the fluorescent light in the direction of the socket. The other end of the fluorescent light will be detached from the opposite socket.

4 Install a new fluorescent light in the reverse order.

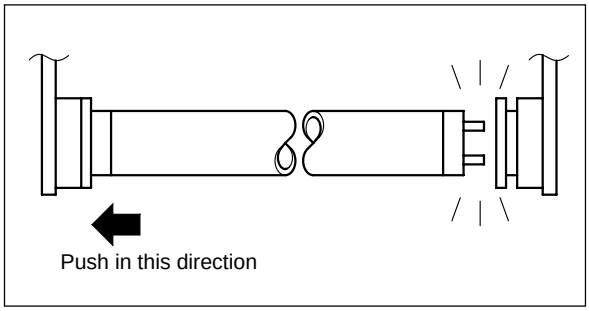

•It is recommended to replace the glow lamp at the same time.

MEMO

7-3 Replacing the start button

How to replace the start button

- **Before replacing the start button, be sure to turn OFF the main power switch and unplug the power cord from the receptacle.**
- **When replacing parts, be sure to use parts of the correct specifications. Never use parts other than the specified ones.**
- **Strictly refrain from disassembly and repair of parts which are not indicated in this manual, as well as settings and remodelling.**

1 Be sure to turn OFF the main power switch and unplug the power cord from the receptacle.

2 Remove the screws and datach the cover.

- Be careful not to force the cover up too far. The wires connected may be damaged inside.

MEMO

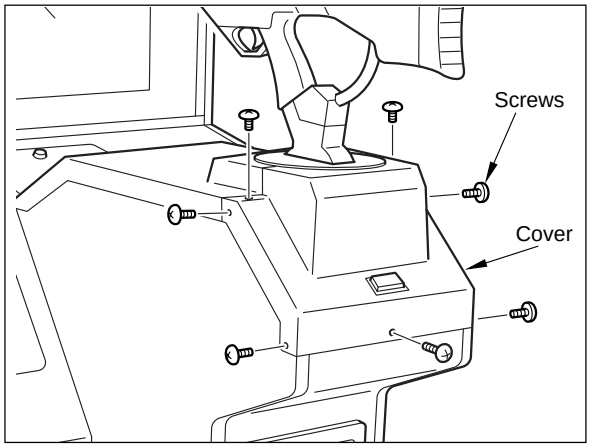

3 Disconnect the connectors.

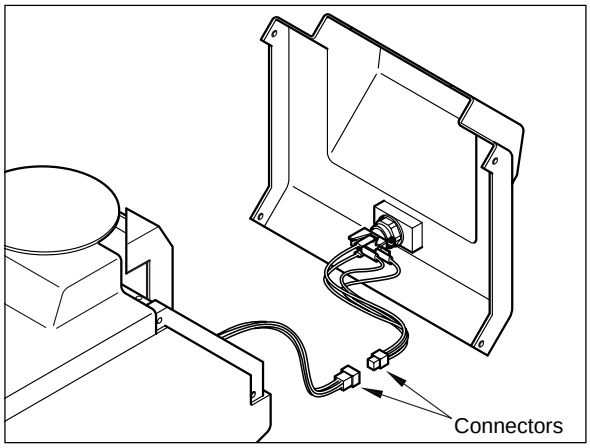

4 Remove the screw off the band that secures the button and the socket.

5 Pull out the socket from the button.

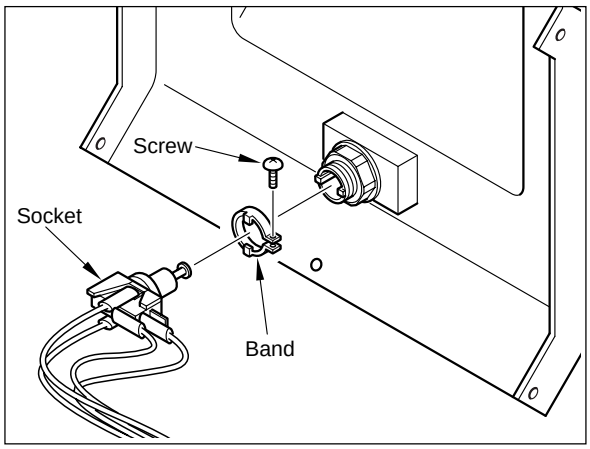

6 Loosen the nut and separate the button.

7 **To fit the button again**

To install the button, take the reverse procedure.

8 Pay attention to the posture of socket and assemble it in the reverse of disassembly, using care not to confuse the wires.

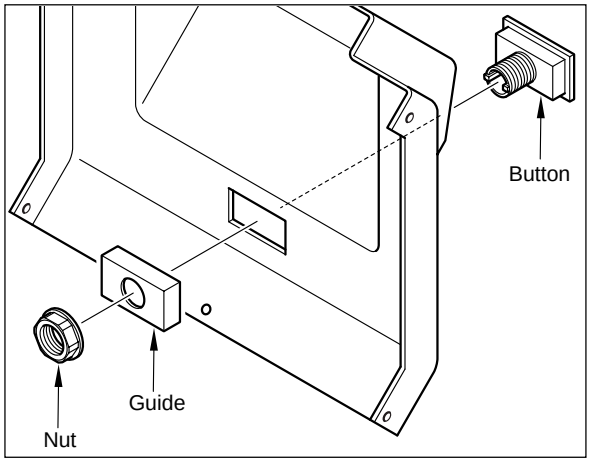

9 Reconnect the connectors (disconnected in Step **3** above).

10 Mount the cover into position.

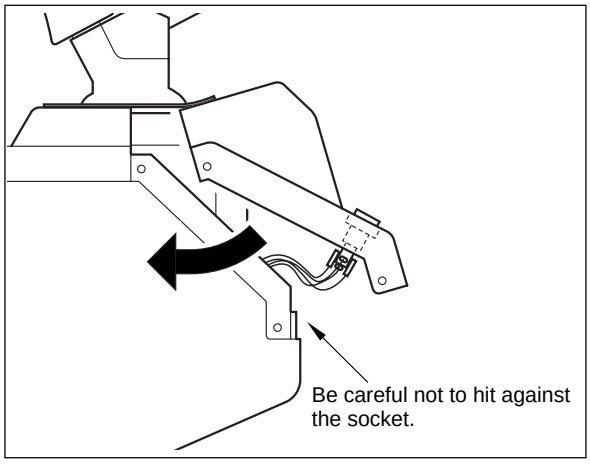

11 Take the steps in “5-2 Checking the game performance (self test)” on page 24 and the steps in “I/O CHECK” on page 26.

•Replacing the socket

Reconnect the wires to a new socket as shown below.

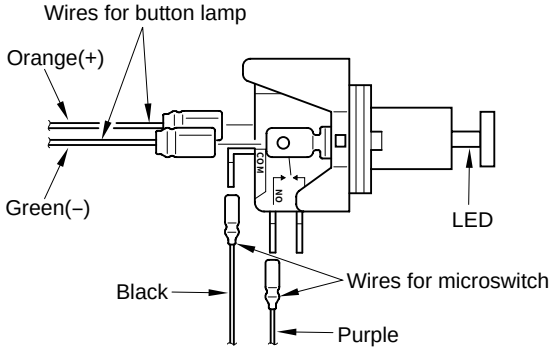

Be sure to connect the orange and green wires to the (+) and (–) terminals, respectively,that are marked on the LED PC board.

MEMO

7-4 Replacing the rifle unit

How to replace the rifle unit

- **Before replacing the rifle unit, be sure to turn OFF the main power switch and unplug the power cord from the receptacle.**
- **The rifle unit weighs approx. 4 kg (8.8 lb). Be careful not to drop it.**
- **When replacing parts, be sure to use parts of the correct specifications. Never use parts other than the specified ones.**
- **Strictly refrain from disassembly and repair of parts which are not indicated in this manual, as well as settings and remodelling.**

1 Be sure to turn OFF the main power switch and unplug the power cord from the receptacle.

2 Remove the screws (see at right).

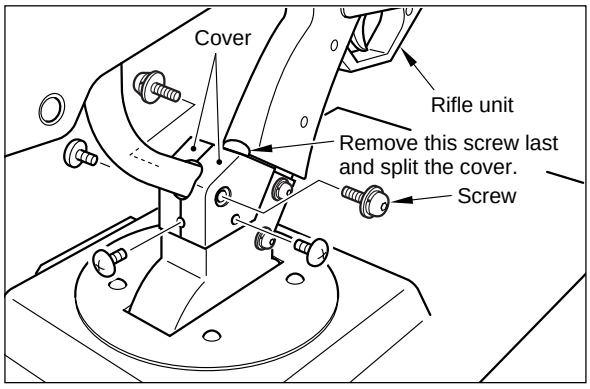

3 Detach the cover and remove another set of screws (see at right).

4 Lift the rifle unit and disconnect the connectors.

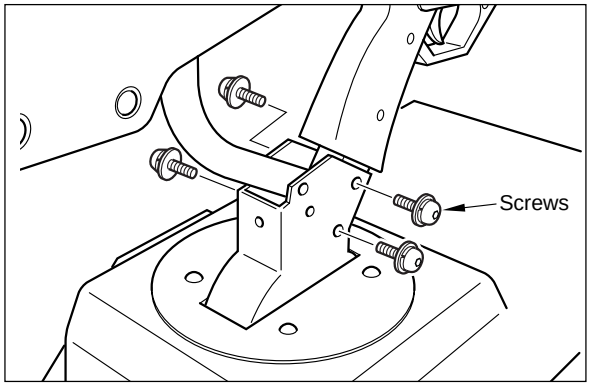

- Be careful not to force the rifle unit up too far. The wires connected may be damaged inside.

MEMO

5 **To fit the rifle unit again**

To install the rifle unit, take the reverse procedure.

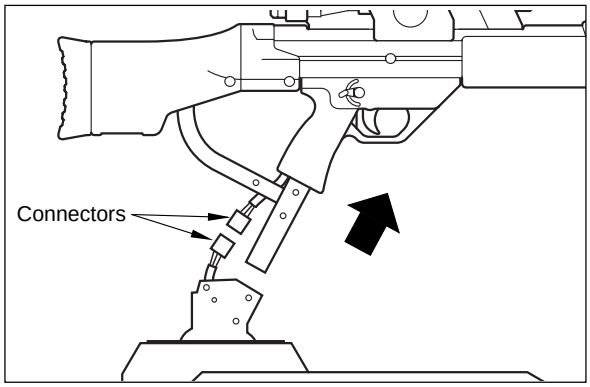

6 Take the steps in “5-2 Checking the game performance (self test)” on page 24 and the steps in “I/O CHECK” on page 26.

7-5 Replacing the rifle unit microswitch

How to replace the microswitch

•Before replacing the microswitch of the rifle unit's trigger, be sure to turn OFF the main power switch and unplug the power cord from the receptacle.
•When replacing parts, be sure to use parts of the correct specifications. Never use parts other than the specified ones.
•Strictly refrain from disassembly and repair of parts which are not indicated in this manual, as well as settings and remodelling.

1 Be sure to turn OFF the main power switch and unplug the power cord from the receptacle.

2 Remove the screws (see at right) and detach the cover of the trigger.

A : M5 x 25L 2
B : M4 x 30L 2
C : M4 x 8 L (no cap nut) 4
D : M4 x 10L 1

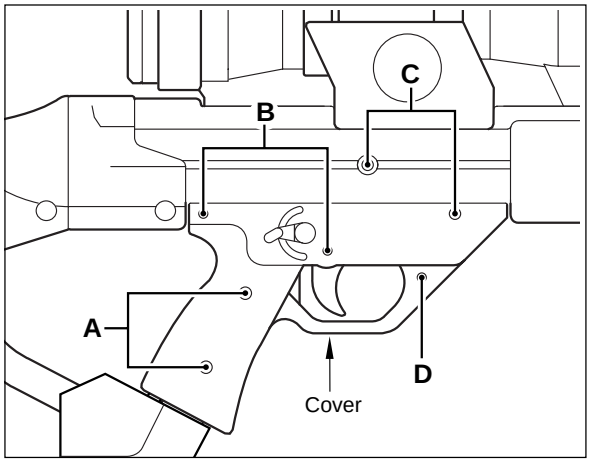

3 Detach the microswitch.

4 Disconnect the wires from the microswitch.

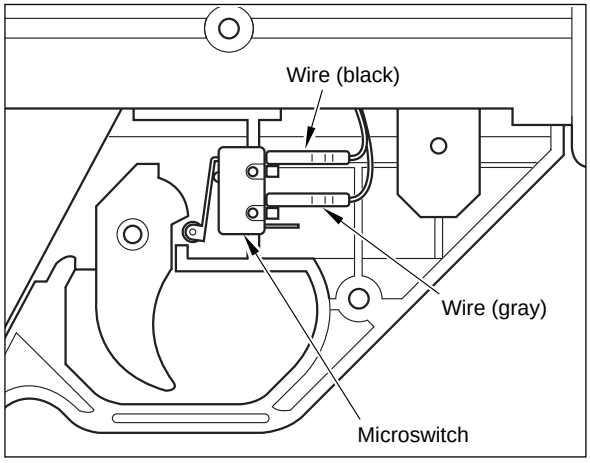

5 **To fit the microswitch again**
Fit a new microswitch in the reverse order. Be careful not to get the wires caught.

6 Place and fix the cover (detached in Step **2** above) back into position.

7 Take the steps in "5-2 Checking the game performance (self test)" on page 24 and the step in "I/O CHECK"on page 26.

7-6 Replacing the scope

How to replace the scope

•Before replacing the scope, be sure to turn OFF the main power switch and unplug the power cord from the receptacle.
•When replacing parts, be sure to use parts of the correct specifications. Never use parts other than the specified ones.
•Strictly refrain from disassembly and repair of parts which are not indicated in this manual, as well as settings and remodelling.

1 Be sure to turn OFF the main power switch and unplug the power cord from the receptacle.

2 Remove the screws (see at right) and detach the scope up straight.

A : M5 x 25L 2
***B :** M4 x 30L 2
C : M4 x 8 L (no cap nut) 4
D : M4 x 10L 1
***Use the accompanying Allen wrench to remove the screws **B**.

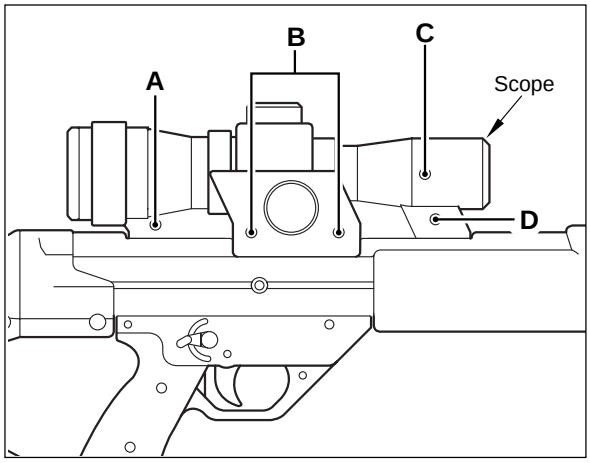

3 Disconnect the connectors.

•Be careful not to force the scope up too far. The wires connected may be damaged inside.

MEMO

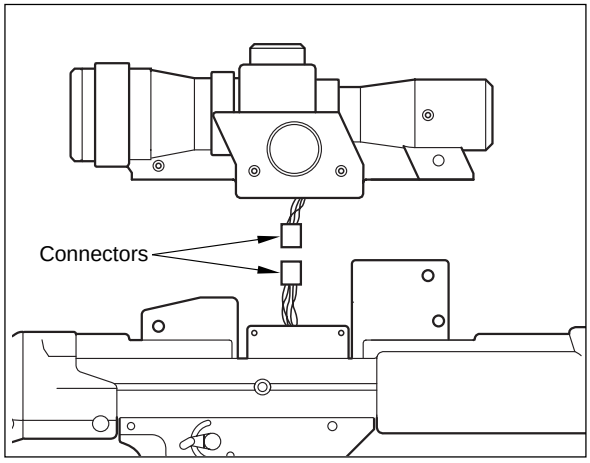

4 **To fit the scope again**
Fit a new scope in the reverse order. Be careful not to get the wires caught.

5 Take the steps in “5-2 Checking the game performance (self test)” on page 24 and the step in “I/O CHECK”on page 26.

7-7 Replacing the rifle unit potentiometers

How to replace the rifle unit potentiometers

- **Before replacing the rifle unit potentiometers, be sure to turn OFF the main power switch and unplug the power cord from the receptacle.**
- **When replacing parts, be sure to use parts of the correct specifications. Never use parts other than the specified ones.**
- **Strictly refrain from disassembly and repair of parts which are not indicated in this manual, as well as settings and remodelling.**

1 Be sure to turn OFF the main power switch and unplug the power cord from the receptacle.

2 Unscrew and detach the door off the control unit.

3 Detach the cover (see at right), referring back to page 48.

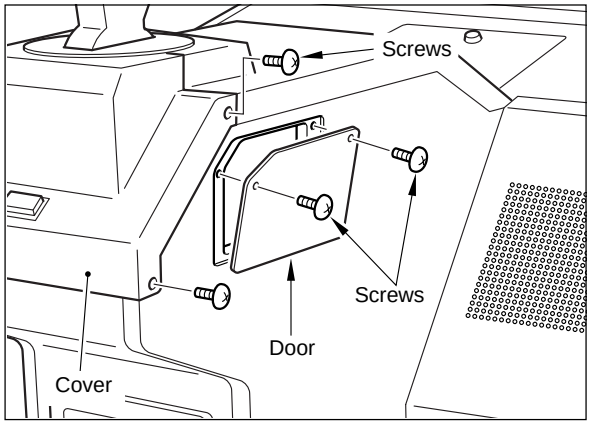

4 Disconnect the wires from the potentiometers.

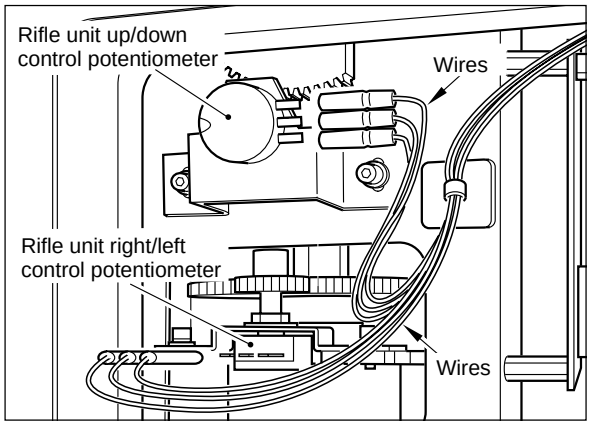

5 Remove the bolts off the potentiometer brackets. Detach the potentiometers and their brackets together.

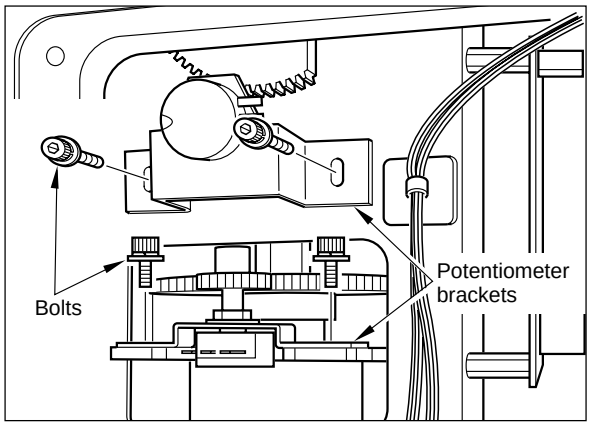

6 ▌ Remove the hexagon nut and separate the potentiometer.

Rifle unit up/down control potentiometer

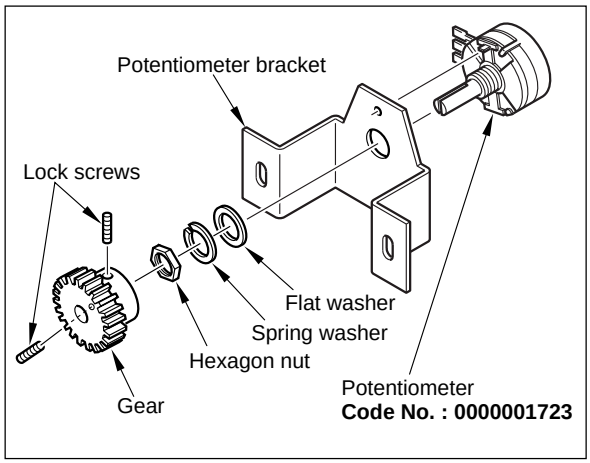

Rifle unit right/left control potentiometer

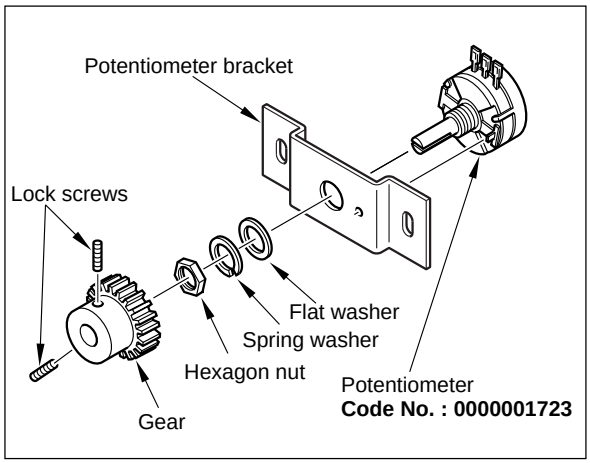

•When replacing the potentiometers with new ones, be sure to first make the adjustment on the next page.

MEMO

How to adjust the rifle unit potetiometers

1 Fit the potentiometer projection to the smallest hole of the potemtiometer bracket. Tighten up the hexagon nut.

2 Install the gear onto the shaft of the potentiometer. Tighten up the two lock screws.

Rifle unit up/down control potentiometer

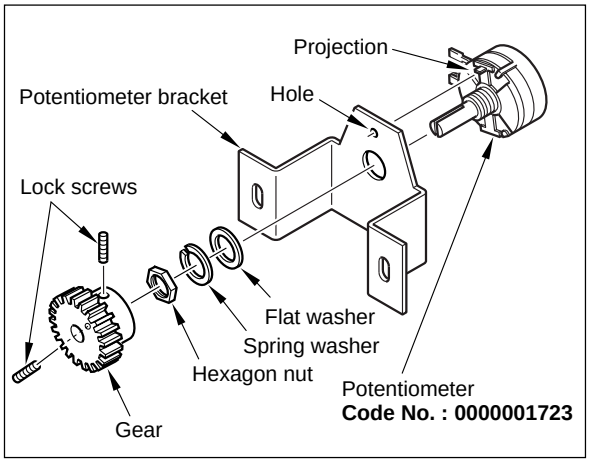

Rifle unit right/left control potentiometer

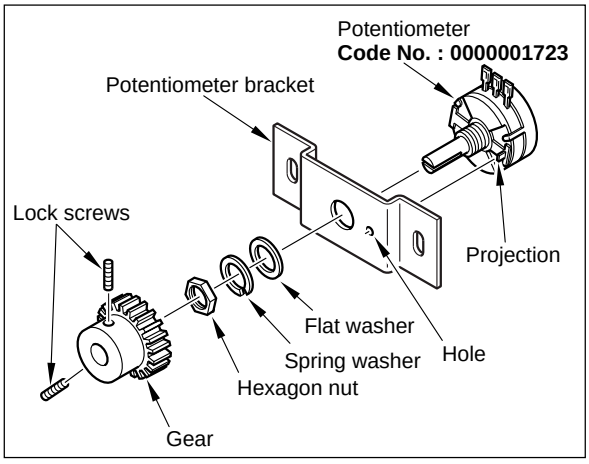

3 Align the potentiometer tip, as shown below.

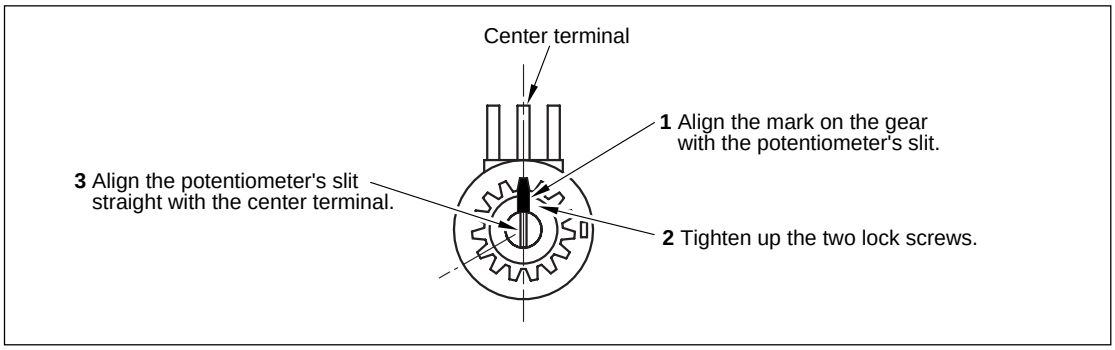

4 Set the potentiometer bracket so that the mark on the potentiometer gear and that on the mating gear be in alignment (see below). Also adjust the gears into good mesh.

Rifle unit up/down control potentiometer

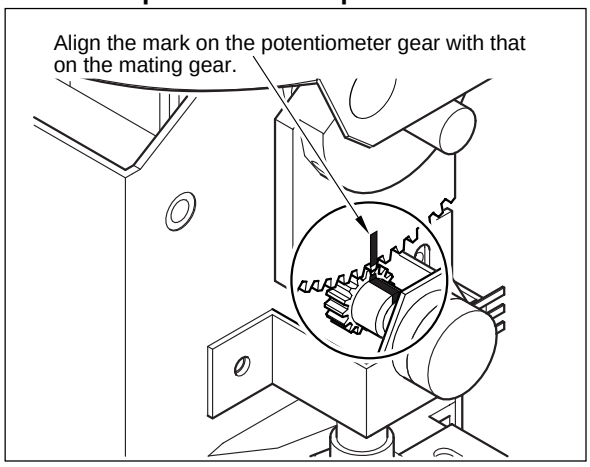

Rifle unit right/left control potentiometer

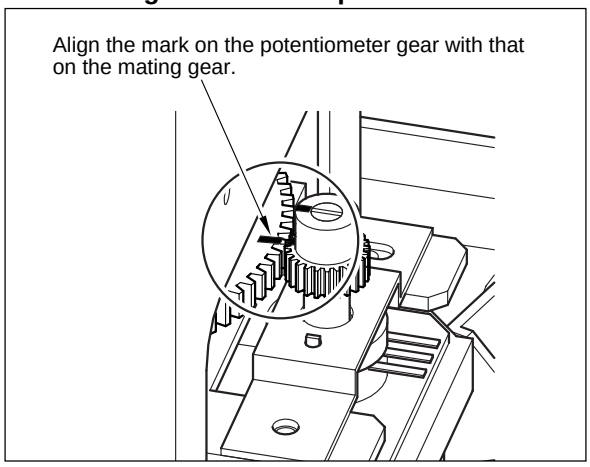

5 Place and fix the potentiometer brackets with the bolts.

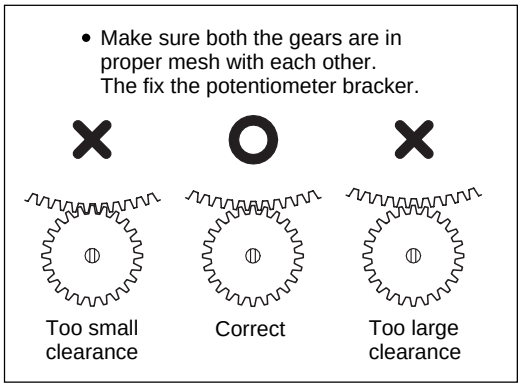

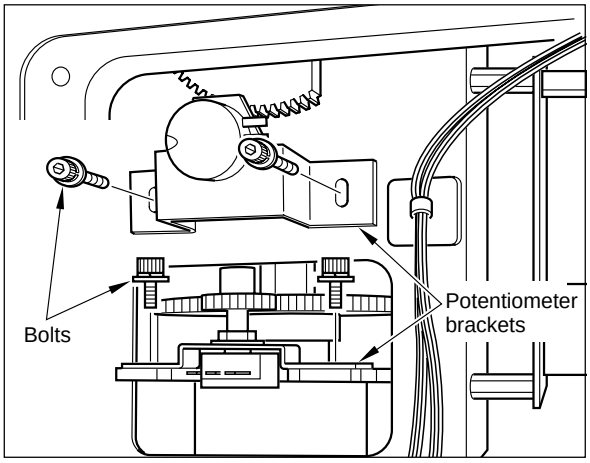

6 Reconnect the wires back to their respective terminals.

7 Place and fix the cover (detached in Step **3** on page 53), referring back to page 48.

8 Plug in the power cord and turn ON the main power switch.

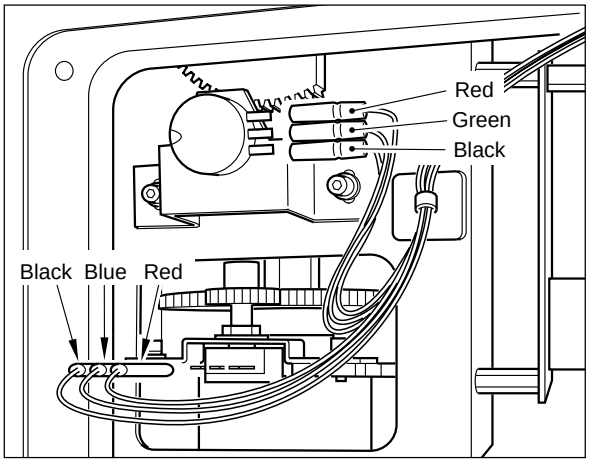

9 Take the steps in “5-2 Checking the game performance” on page 24 and the steps in “I/O CHECK” on page 26. Follow the procedure below to check the rifle unit performance.

1 Swing the rifle unit all the way to the left or the right. Hold it in this position.
2 Make sure that the “I” bar in “Volume” of “GUN YAW” is not in the red range. If in the red range, the potentiometer may get in trouble. Reposition and readjust the potentiometer so that the “I” bar comes into the green range.
3 While holding the rifle unit in that position, make sure that the “Free” reading is “0000”.(If the reading is not “0000”, go back to the above step **1**.)
4 Make sure the reading is “0000”, and make one turn of the potentiometer gear gently by hand. If the “I” bar in “Free” comes in the red range again, it means the gear’s clearance is too large. This fails to play the game. Readjust the potentiometer gear into good mesh. Finally make sure the “I” bar is in the green range.

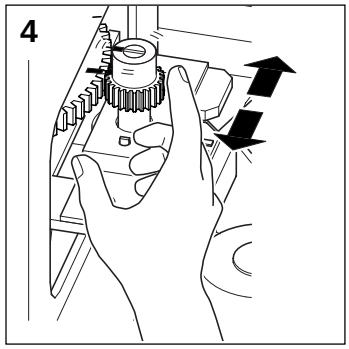

10 Make sure the rifle unit functions as specified. Place and fix the door and cover (detached in Step **2** and **3** on page 53) with the screws.

7-8 Taking out the PCB unit

How to take out the PCB unit

•Be sure to ask a qualified industry specialist or your nearest dealer to take out the PCB unit. (You will be charged.)
•Before removing the PCB unit, be sure to turn OFF the main power switch and unplug the power cord from the receptacle.
•There are high-voltaged parts inside the product. Other persons than qualified industry specialist should not open the side door. When the side door is opened, pay due attention not to touch the inside unnecessarily.
•Do not touch the PCB unit with wet hands.
•Keep the PCB unit's DIP switches at the factory settings.
•Strictly refrain from disassembly and repair of parts which are not indicated in this manual, as well as settings and remodelling.

1 Be sure to turn OFF the main power swith and unplug the power cord from the receptacle.

2 Detach the side door of the control unit (see at right).

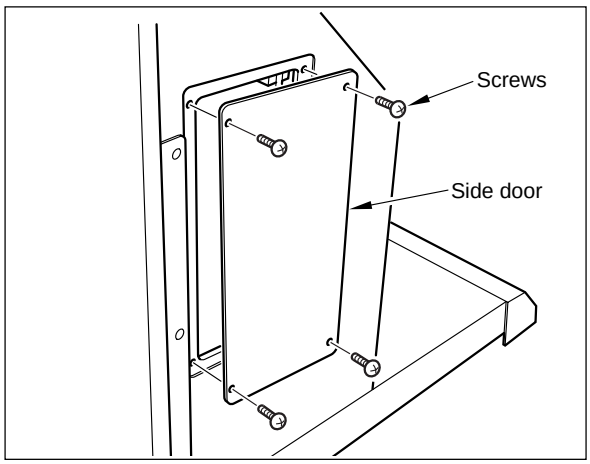

•The side door may fall down when the screws are removed. Hold the side door with one hand and remove the screws.

MEMO

3 Disconnect all the connectors and networking cable from the PCB unit as well as the connectors **1** and **2**.

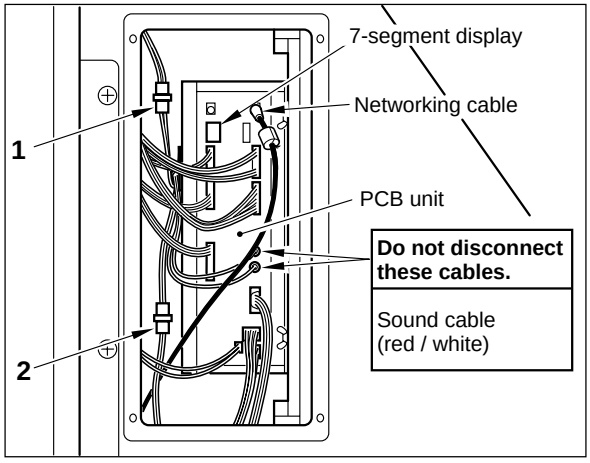

1 Speaker cable
(Red, Black, Gray, White)

2 AMP Power cable
(Orange, Black)

MEMO

4 Remove the wing bolts. Hold the grip and gently draw out the wooden board with the PCB unit attached.

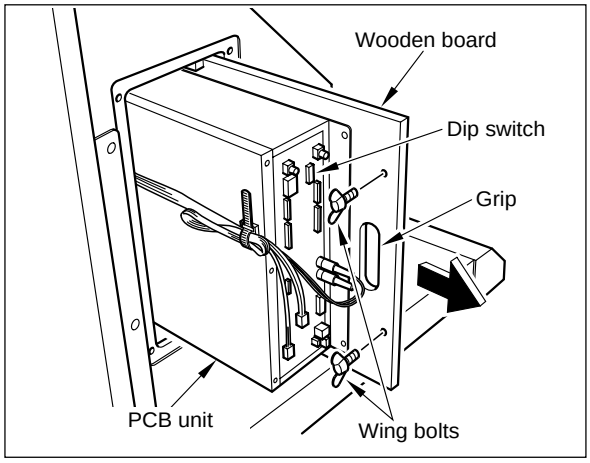

MEMO

- Be careful not to force the cover up too far. The wires connected may be damaged inside.
- Factory-adjusted DIP switch settings:
  - Bit Nos. 1 thru 8: Set at OFF

5 **To fit the PCB unit again**

Push the unit fully into position with enough care not to get the wires caught.

6 Fix the wooden board with the wing bolts and reconnect the connectors.

7 Secure the side door tightly with the screws.

7-9 Resetting the circuit protector

How to reset the circuit protector

If an overcurrent or short circuit occurs, the circuit protector will be automatically actuated to protect the electric circuits of the game machine. When resetting the circuit protector, turn OFF the main power switch, unplug the power cord from the receptacle, eliminate the cause, and then press the button of the circuit protector.

- **Before resetting the circuit protector, be sure to turn OFF the main power switch and unplug the power cord from the receptacle.**
- **If the circuit protector trips soon again, immediately turn OFF the main power switch, unplug the power cord, and contact your nearest dealer.**
- **There are high-voltaged parts inside the product. Other persons than qualified industry specialist should not open the back door and side door. When the back door and side door is opened, pay due attention not to touch the inside unnecessarily.**
- **When opening the back door and side door, be sure to turn OFF the main power switch and unplug the power cord from the receptacle.**
- **If the machine is in abnormal conditions and does not operate normally, immediately turn OFF the main power switch, unplug the power cord from the receptacle and contact your nearest dealer.**

1 Be sure to turn OFF the main power swith and unplug the power cord from the receptacle.

2 Remove the cause of the trouble. Press the button on the circuit protector of the power unit.

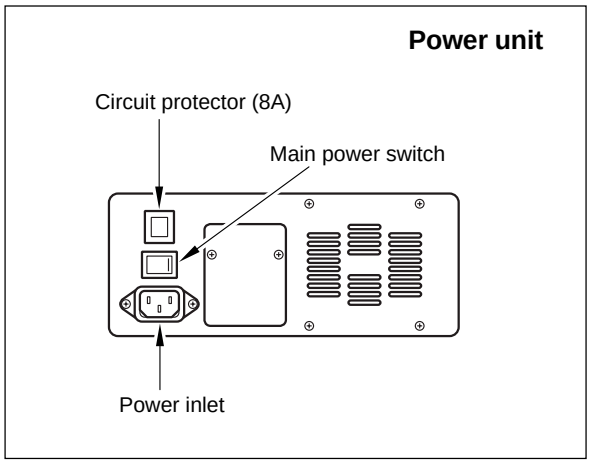

7-10 Adjusting the monitor

Monitor adjustment PCB

The monitor has already been adjusted at the time of shipment, but it may be readjusted as desired.
The monitor adjustment PCB is located inside the machine. To access the PCB, open the monitor adjustment door (refer to page 22).

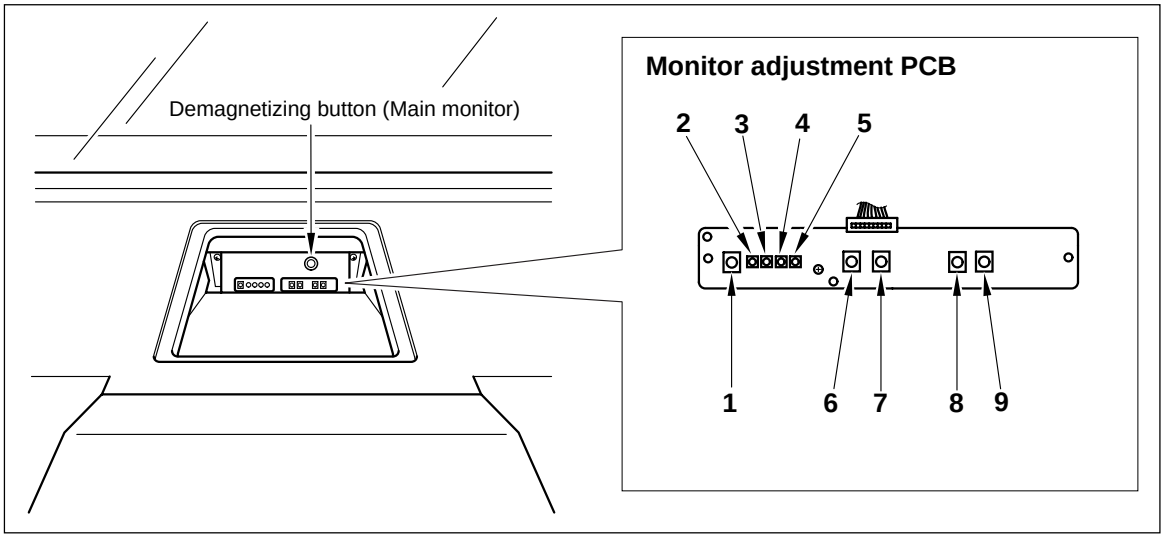

1	CONTRAST	**Contrast adjustment** Used to changes the contrast.
2	R.GAIN	**Red input gain adjustment** Changes red brightness. Turning it clockwise will make the red deeper.
3	G.GAIN	**Green input gain adjustment** Changes green brightness. Turning it clockwise will make the green deeper.
4	B.GAIN	**Blue input gain adjustment** Changes blue brightness. Turning it clockwise will make the blue deeper.
5	BRIGHT	**Brightness adjustment** Changes brightness. Turning it clockwise will make the image brighter.
6	H.SIZE	**Horizontal screen size adjustment** Changes the width of the screen.
7	H.POSI	**Horizontal image position adjustment** Changes the image position in the horizontal direction.
8	V.SIZE	**Vertical screen size adjustment** Changes the height of the screen.
9	V.POSI	**Vertical image position adjustment** Changes the image position in the vertical direction.

7-11 Adjusting the brightness on the scope LCD screen

How to adjust the LCD screen brightness

•Strictly refrain from disassembly and repair of parts which are not indicated in this manual, as well as settings and remodelling.

1 Turn ON the main power switch and get the game started.

2 While the demonstration game is playing, press the test button on the service panel.

3 Select “COLOR CHECK” on the main menu screen.

4 Remove the cap, shown at right, off the scope.

5 Insert the tip of a thin bladed screwdriver into this hole. Adjust the contrast while looking into the scope.

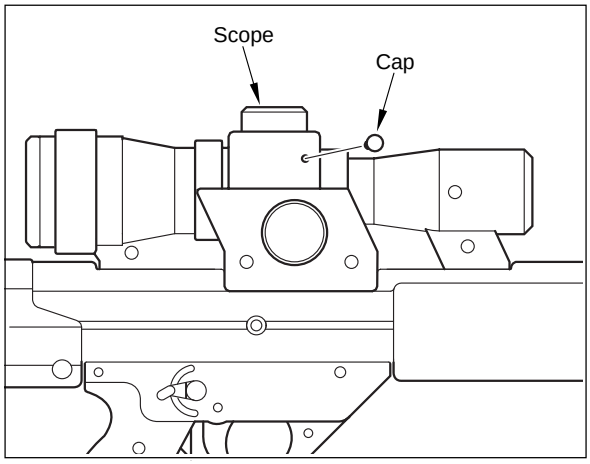

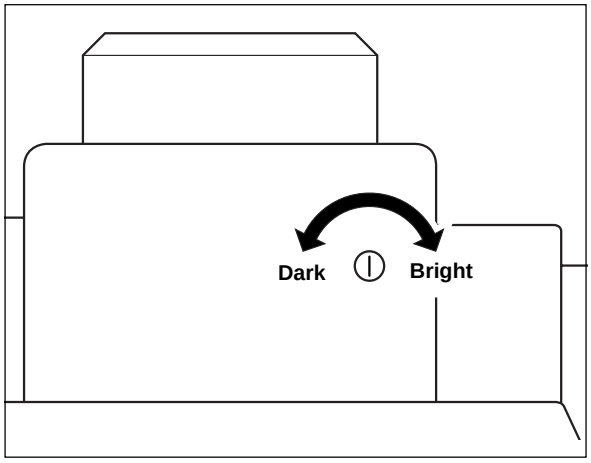

•Images on the scope LCD screen can also be displayed on the main screen during the demonstration game. For this setting, refer to “GAME OPTIONS” on page 30.

MEMO

7-12 Troubleshooting

If the power switch is turned ON but the machine fails to start properly, take the following measures. If the machine still malfunctions or any other problem than described below occurs, immediately turn OFF the main power switch, unplug the power cord from the receptacle and contact your nearest dealer.

Trouble	Possible cause & check point	Measures
No image on main screen, title unit fluorescent light failure to light up.	•No power supply.	◦Turn ON the main power switch. Check also store's circuit breaker. (See page 41.)
	•Power cord unplugged at machine or wall outlet.	◦Reconnect power cord. (See page 41.)
	•Back door open or poorly closed.	◦Close back door tightly with screws: door switch activated to cut off power. (See page 41.)
No image on main screen: title unit fluorescent light on, but PCB unit 7-segments display off.	•Connector(s) wrongly connected when joining the separated units.	◦Reconnect connector(s) properly. (See page 40.)
	•Wires (connectors) disconnected on PCB unit.	◦Check to see if PCB unit wires (connectors) are all connected. (See page 57.)
Title unit fluorescent light failure to light up.	•Fluorescent light or glow lamp broken.	◦Replace fluorescent light and glow lamp with same-type ones. (See page 47.)
	•Connector(s) wrongly connected when joining the separated units.	◦Reconnect connector(s) properly. (See page 44.)
Main monitor screen too dark or too bright.	•Monitor maladjusted.	◦Readjust brightness on main monitor screen using monitor adjustment PCB. (See page 60.)
Game started, but no image on scope screen.	•Connector(s) wrongly connected after replacing the rifle unit or the scope.	◦Reconnect connector(s) properly. (See pages 50 and 52.)
	•Wires (connectors) disconnected on PCB unit.	◦Check to see if PCB unit wires (connectors) are all connected. (See page 57.)

Trouble	Possible cause & check point	Measures
Start button malfunctioning.	•Switch wires disconnected from start button socket. •Wires (connectors) disconnected on PCB unit. •Start button defective.	◦Reconnect switch wires properly to socket. (See page 48.) ◦Check to see if PCB unit wires (connectors) are all connected. (See page 57.) ◦Replace start button as required. (See page 48.)
Start button functioning, but button lamp failure to light up.	•Lamp wires disconnected from start button socket, or wrongly connected. •Start button lamp (LED) defective.	◦Reconnect lamp wires properly to socket. (See page 48.) ◦Check performance on "I/O CHECK" screen. Replace start button as required. (See page 49.)
Rifle unit's trigger malfunctioning.	•Wires disconnected from trigger's microswitch. •Wires (connectors) disconnected on PCB unit. •Trigger's microswitch defective.	◦Reconnect microswitch wires properly. (See page 51.) ◦Check to see if PCB unit wires (connectors) are all connected. (See page 57.) ◦Check performance on "I/O CHECK" screen. Replace trigger's microswitch as required. (See page 51.)
Coin selector malfunctioning.	•Coin selector defective.	◦Check performance on "I/O CHECK" screen. Replace coin selector or microswitch as required. (See page 46.)

Trouble	Possible cause & check point	Measures
Rifle unit orientation cursor failure to move or out of position.	•Reference settings greatly out of spec.	◦Check performance on "I/O CHECK" screen. Make new settings on "GUN CHECK" screen as required. (See page 27.)
	•Wires disconnected from rifle unit's potentiometer.	◦Reconnect potentiometer wires properly. (See page 56.)
	•Rifle unit's potentiometer wrongly installed.	◦Install potentiometer properly. (See page 53.)
	•Rifle unit's potentiometer defective.	◦Replace potentiometer with new one. (See page 53.)
Image out of position on scope screen.	•Reference settings greatly out of position.	◦ Make new settings on "SCOPE SCREEN ADJUST" screen. (See page 28.)
Image too dark or too bright on scope screen.	•Scope LCD screen maladjusted.	◦Readjust brightness on scope LCD screen. (See page 61.)
No sound, or sound too weak or too loud.	•Sound level maladjusted.	◦Make new settings on "SOUND OPTIONS" screen. (See page 29.)
	•Wires (connectors) disconnected on PCB unit.	◦Check to see if PCB unit wires (connectors) are all connected. (See page 57.)
No image on screen at start (power supplied and monitor well adjusted)	•Error message "Er**" in 7-segments display of PCB unit. (See page 57.)	◦Write down the error code "**", immediately turn OFF the main power switch, unplug the power cord from the receptacle and contact your nearest dealer.

Trouble	Possible cause & check point	Measures
"BAD" displayed on "MASK ROM CHECK" screen in test mode.	•Indicated Mask ROM defective.	◦Write down the error code "***", immediately turn OFF the main power switch, unplug the power cord from the receptacle and contact your nearest dealer.
"HARDWARE ERROR (***)" displayed on screen. Game failure to start.	•Hardware getting in trouble.	◦Write down the error code "***", immediately turn OFF the main power switch, unplug the power cord from the receptacle and contact your nearest dealer.
Following display shown on screen at start. Game failure to start. BACKUP DATA ERROR OPTION SETTINGS RANKING DATA BOOKKEEPING INCOME DATA SCOPE SCREEN ADJUST DATA GUN VOUME DATA PRESS TEST SWITCH to FACTORY/DEFAULT SETTINGS AND MANUAL TEST MODE	•Error in indicated item.	◦Press test button to return "OPTION SETTINGS", "RANKING DATA" and "BOOKKEEPING INCOME DATA" settings to factory ones. For "SCOPE SCREEN ADJUST DATA" and "GUN VOLUME DATA" settings, press test button to go back to test mode. Then make new settings.
The following message appears. (The game may fail to play.) GAME MODE LOCKED! CONTACT YOUR NEAREST DEALER PLEASE SET the PASSWORD PRESS TEST SWITCH to MANUAL TEST MODE	•Something is wrong with the product.	◦Immediately turn OFF the main power switch, unplug the power cord from the receptacle and contact your nearest dealer.

8 Annex

8-1 Label locations and exploded view

Label

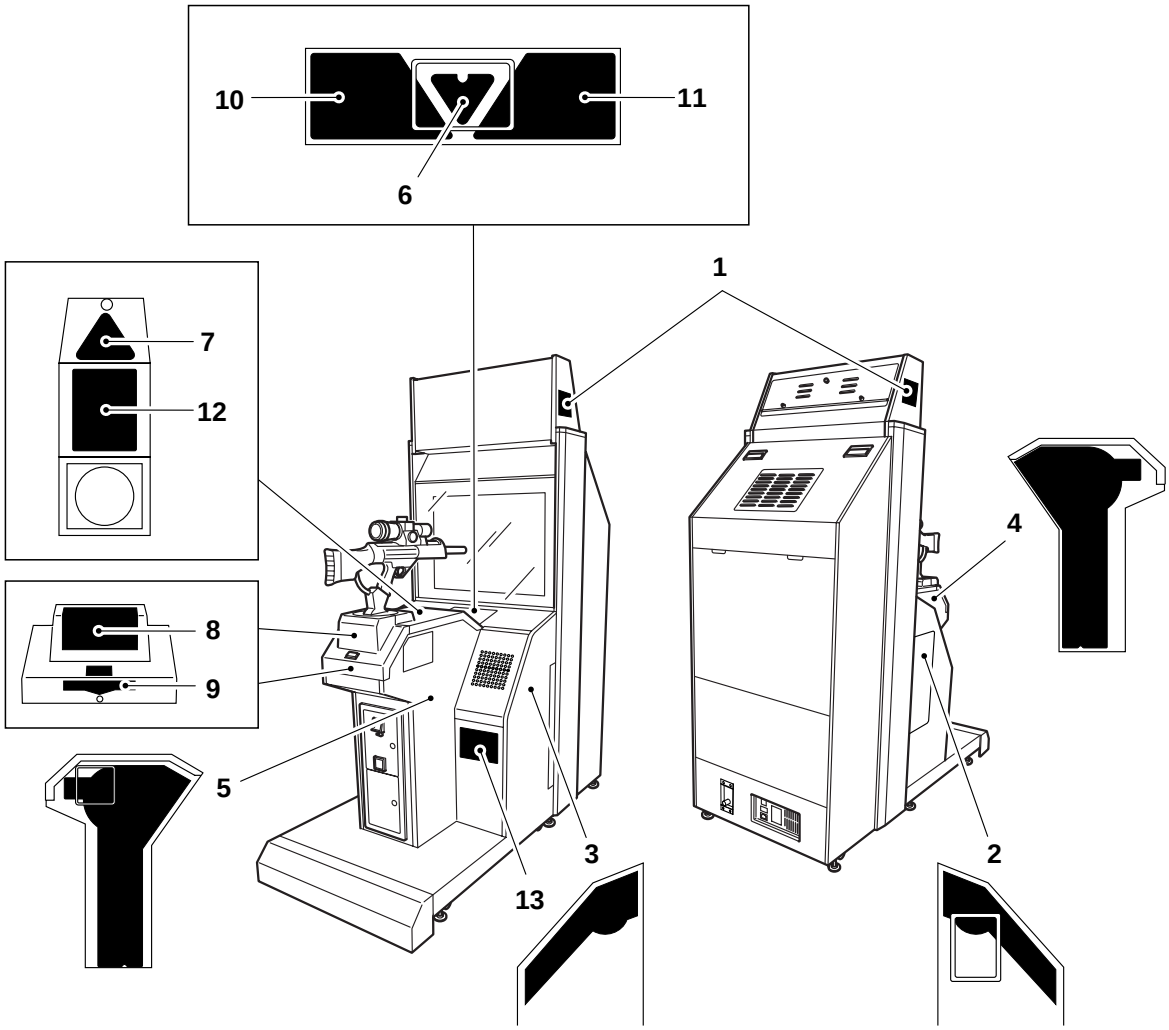

No.	CODE No.	NAME	QTY	NOTE
1	0000061691	LABEL, KONAMI	2	
2	0000061562	LABEL, SIDE A/L	1	
3	0000061563	LABEL, SIDE A/R	1	
4	0000072486	LABEL, SIDE B/L	1	
5	0000072487	LABEL, SIDE B/R	1	
6	0000061726	LABEL, TRIANGL A/HD	1	
7	0000061570	LABEL, TRIANGL B	1	
8	0000061728	LABEL, PL/START/HD	1	
9	0000061572	LABEL, INSERT COIN	1	
10	0000072499	LABEL, PLAING/HD/L	1	
11	0000072500	LABEL, PLAING/HD/R	1	
12	0000072816	LABEL, PL/INST/HD	1	
13	0000072493	LABEL, FRONT	2	
-	0000072494	LABEL, PLAYER	1	Number label
-	0000072817	POP	1	Networking billboard

FIG.1 UNIT

NO.	CODE No.	NAME	MATERIAL/SPECIFICATION	QTY	NOTE
01	0000073004	UNIT,CABINET TITLE	-	1	
02	0000072975	UNIT,CABINET MONITOR	-	1	
03	0000063380	UNIT,GUN	-	1	
04	0000073003	UNIT,CABINET FRONT	-	1	
05	0000061430	JOINT	SECC T2.3	2	
06	0000060634	COVER,JOINT	SECC T1.2	1	
07	0000060635	COVER,JOINT	SECC T1.2	1	
101		SCREW,CROSS TRUSS	M6X15	4	
102		BOLT,BUTTON HEAD	M8X35	6	SW,PW
103		BOLT,BUTTON HEAD	M6X15	6	SW,PW
104		SCREW,CROSS TRUSS	M4X6	4	

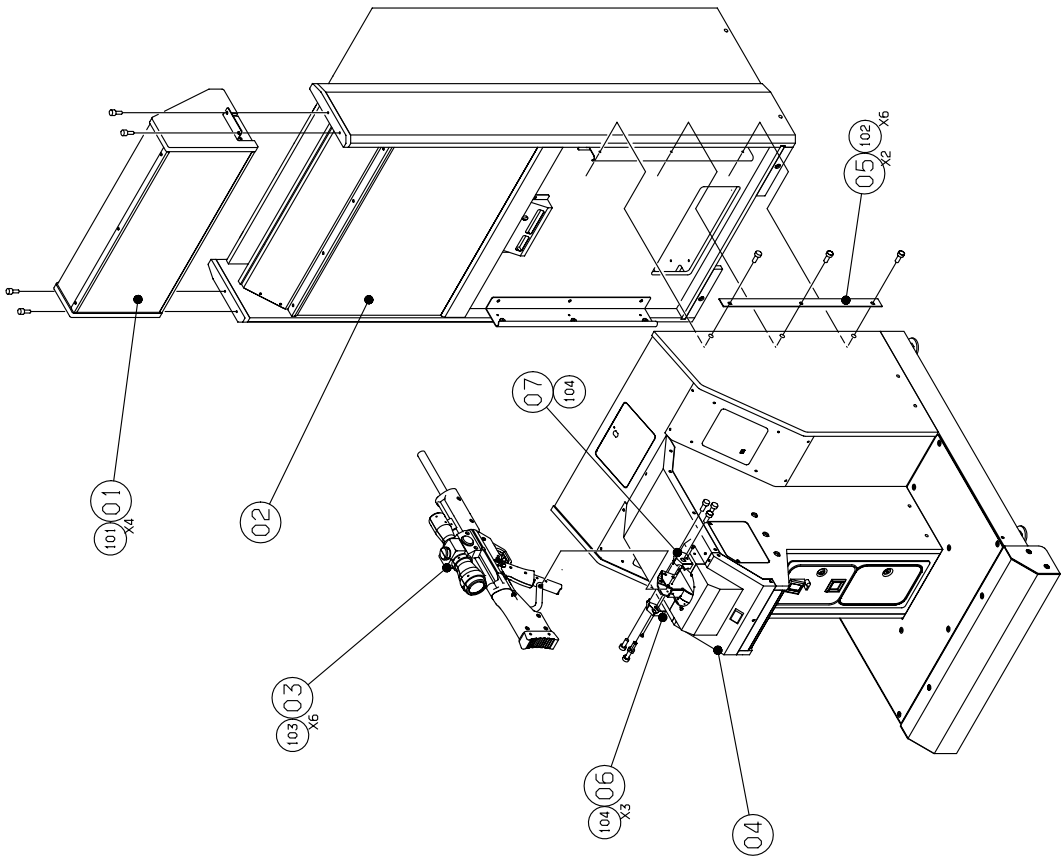

FIG.2 UNIT, CABINET CONTROL

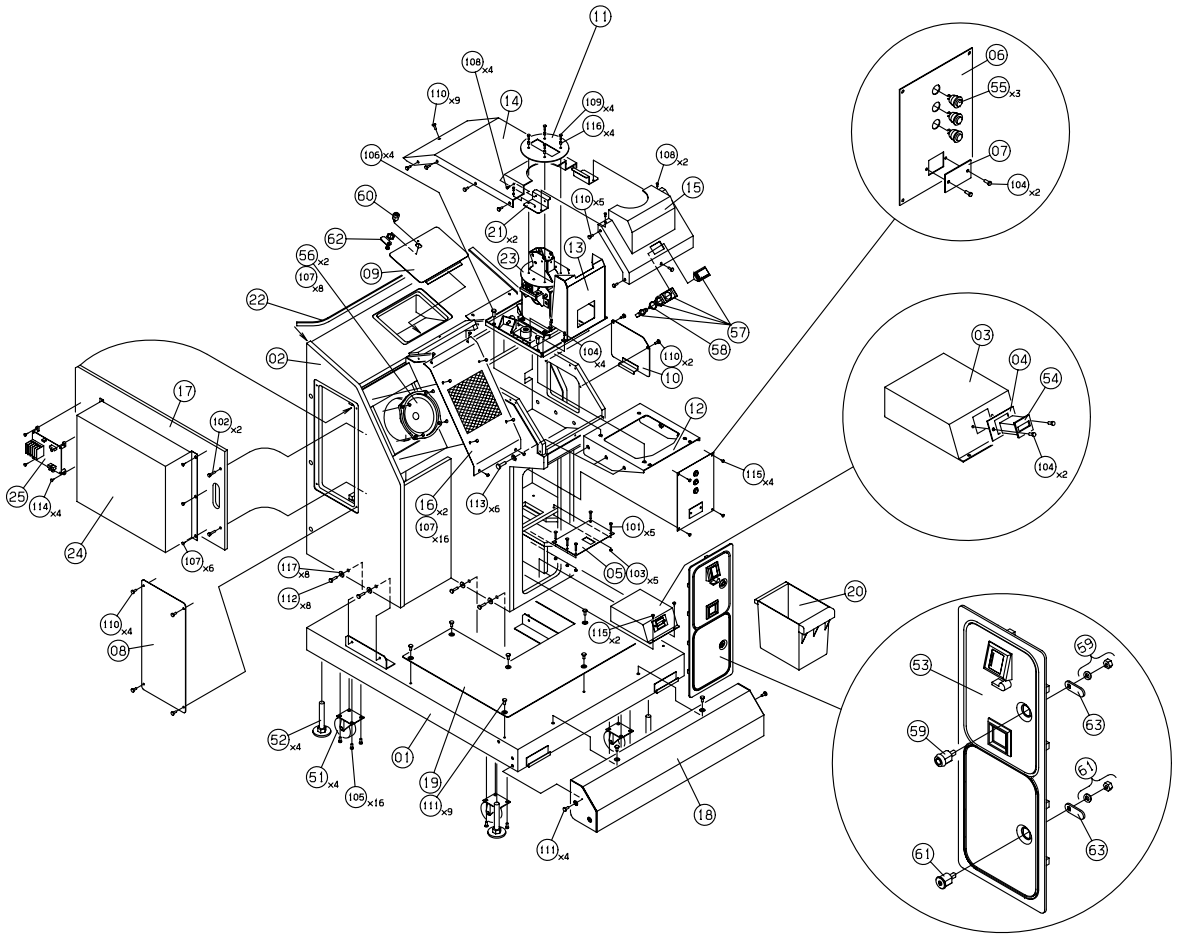

NO.	CODE.NO.	NAME	MATERIAL/SPECIFICATION	QTY	NOTE
01	0000061438	BASE,CABINET	SECC T1.6	1	
02	0000071745	CABINET,FRONT	PLYWOOD T15,T18	1	
03	0000061432	BASE,COINBOX	SPCC T1.6	1	
04	0000036952	BRACKET,COUNTER	SPCC T1.6	1	
05	0000042191	PLATE,COIN	SPCC T1.2	1	
06	0000061431	PLATE,SERVICE	SPCC T1.2	1	
07	0000054682	COVER,COUNTER	SPCC T1.2	1	
08	0000061427	COVER,MAINTENANCE	SECC T1.6	1	
09	0000061429	COVER,MAINTENANCE	SECC T1.6	1	
10	0000061428	COVER,MAINTENANCE	SECC T1.6	1	
11	0000061473	SHEET,MASK	PC T2	1	
12	0000061435	BRACKET,CONTROL	SPCC T2.3	1	
13	0000061433	SUPPORT,COVER	SPCC T1.6	1	
14	0000071743	COVER,CONTROL	PMMA/PVC T5	1	
15	0000071742	COVER,CONTROL	PMMA/PVC T5	1	
16	0000061434	COVER,SPEAKER	SUS304 T1.5	2	
17	0000061458	BOARD,PCB	PLYWOOD T12	1	
18	0000061437	COVER,STEP	CHECKER T2.3	1	
19	0000061436	PLATE,STEP	CHECKER T2.3	1	
20	0000006850	BOX,COIN	ABS	1	
21	0000061461	FIXTURE,COVER	SECC T1.2	2	
22	0000060423	TAPE,SPONGE	CR FORM T2	1	
23	0000060293	UNIT,MECHANISM		1	
24	0000072452	UNIT,PCB BOX		1	
25	0000053028	UNIT,PCB(M)		1	
51	0000047156	CASTER	TCM-75NM	4	
52	0000061705	ADJUSTER	16*92*75	4	
53	0000036914	DOOR,COIN	NAD-W1 KAHA	1	HD(SD)
	0000065677	DOOR,COIN	NAD-W1 KATA	1	TB
54	0000030431	COUNTER	GX-06PD55	1	
55	0000005098	SWITCH,PUSH	DS-412-2P	3	
56	0000002616	SPEAKER	PD16239B	2	
57	0000061494	BUTTON,PUSH	OBSA-45UK-W-LED-R	1	
58	0000002412	CLIP,BUTTON	OBSA-BK	1	
59	0000001676	LOCK	NS-801-1 W/2(5000)	1	
60	0000002771	LOCK	NS-801-1 W/0(5000)	1	
61	0000005537	LOCK	NS-812 W/2(RANDOM)	1	
62	0000004531	PLATE,LOCK	No.1	1	
63	0000004799	PLATE,LOCK	No.2	2	
101		BOLT,CAP SQUARE NECK	M4x25	5	
102		BOLT,WING	M5x25	2	
103		NUT,FLANGE	M4	5	
104		SCREW,CROSS PAN SEMS	M4x10	8	SW,PW
105		SCREW,CROSS PAN SEMS	M6x15	16	SW,PW
106		SCREW,CROSS PAN SEMS	M8x20	4	SW,PW
107		SCREW,CROSS TAPPING TRUSS	M4x12	30	
108		SCREW,CROSS TRUSS	M4x6	6	
109		SCREW,CROSS BIND	M4x15	4	
110		SCREW,CROSS TRUSS	M5x15	20	
111		SCREW,CROSS TRUSS	M6x15	13	
112		SCREW,CROSS TRUSS	M6x25	8	
113		SCREW,CROSS TRUSS	M8x30	6	
114		SCREW,WOOD CROSS ROUND	M2.7x13	4	
115		SCREW,WOOD CROSS ROUND	M3.5x13	6	
116		SPACER	4x9	4	
117		WASHER,PLAIN	M6	8	D=20

FIG.3 UNIT, CABINET MONITOR

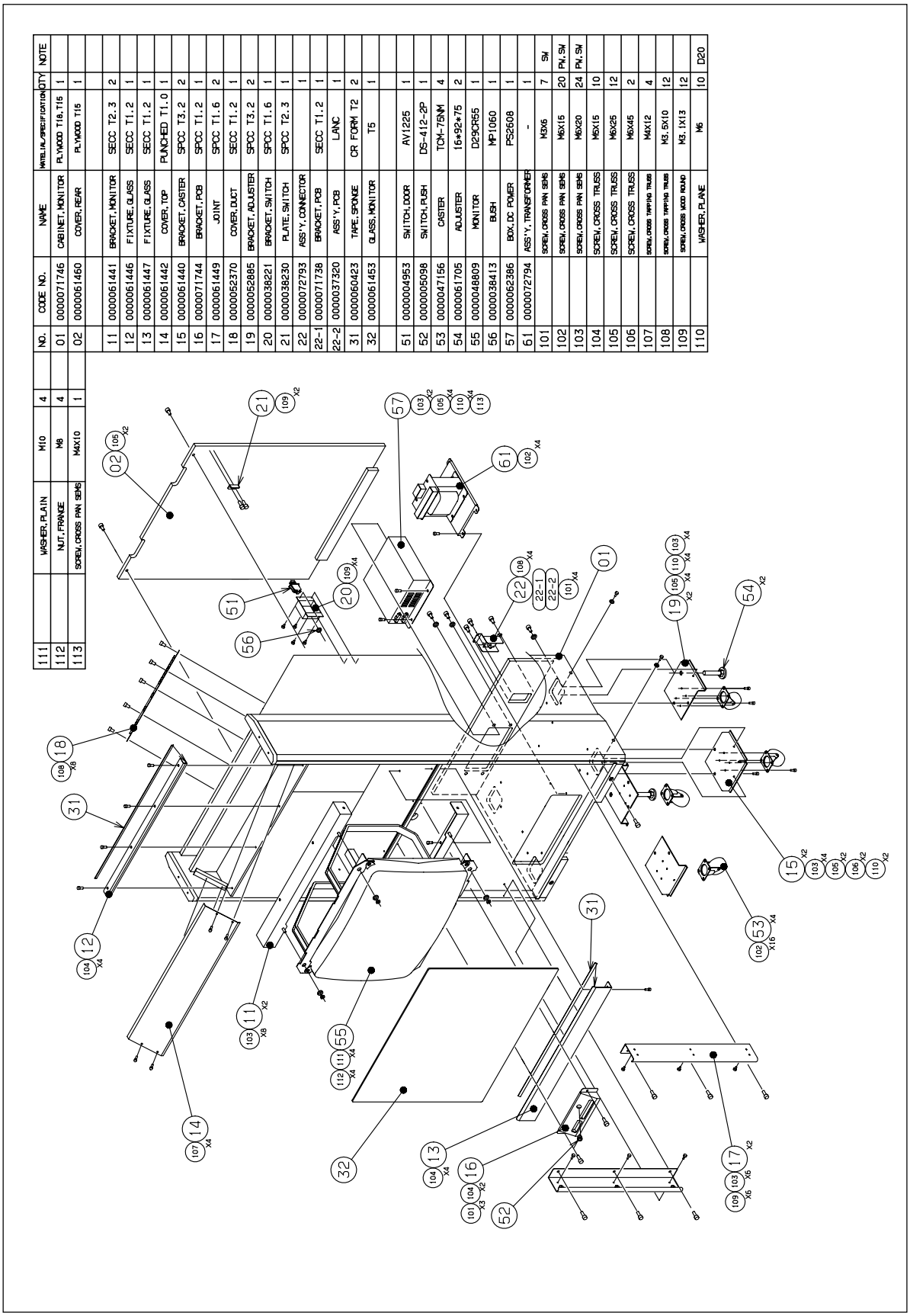

NO.	CODE NO.	NAME	MATERIAL SPECIFICATION	QTY	NOTE
111		WASHER, PLAIN	M10	4	
112		NUT, FRANGE	M8	4	
113		SCREW, CROSS PAN SEMS	M4X10	1	
01	0000071746	CABINET, MONITOR	PLYWOOD T18, T15	1	
02	0000061460	COVER, REAR	PLYWOOD T15	1	
11	0000061441	BRACKET, MONITOR	SECC T2.3	2	
12	0000061446	FIXTURE, GLASS	SECC T1.2	1	
13	0000061447	FIXTURE, GLASS	SECC T1.2	1	
14	0000061442	COVER, TOP	PUNCHED T1.0	1	
15	0000061440	BRACKET, CASTER	SPCC T3.2	2	
16	0000071744	BRACKET, PCB	SPCC T1.2	1	
17	0000061449	JOINT	SPCC T1.6	2	
18	0000052370	COVER, DUCT	SECC T1.2	1	
19	0000052885	BRACKET, ADJUSTER	SPCC T3.2	2	
20	0000038221	BRACKET, SWITCH	SPCC T1.6	1	
21	0000038230	PLATE, SWITCH	SPCC T2.3	1	
22	0000072793	ASS'Y, CONNECTOR		1	
22-1	0000071738	BRACKET, PCB	SECC T1.2	1	
22-2	0000037320	ASS'Y, PCB	LANC	1	
31	0000060423	TAPE, SPONGE	CR FORM T2	2	
32	0000061453	GLASS, MONITOR	T5	1	
51	0000004953	SWITCH, DOOR	AV1225	1	
52	0000005098	SWITCH, PUSH	DS-412-2P	1	
53	0000047156	CASTER	TCM-75NM	4	
54	0000061705	ADJUSTER	16×92×75	2	
55	0000048809	MONITOR	D29CR55	1	
56	0000038413	BUSH	MP1060	1	
57	0000062386	BOX, DC POWER	PS2608	1	
61	0000072794	ASS'Y, TRANSFORMER	-	1	
101		SCREW, CROSS PAN SEMS	M3X6	7	SW
102		SCREW, CROSS PAN SEMS	M6X15	20	PW, SW
103		SCREW, CROSS PAN SEMS	M6X20	24	PW, SW
104		SCREW, CROSS TRUSS	M6X15	10	
105		SCREW, CROSS TRUSS	M6X26	12	
106		SCREW, CROSS TRUSS	M6X45	2	
107		SCREW, CROSS TAPPING TRUSS	M4X12	4	
108		SCREW, CROSS TAPPING TRUSS	M3.5X10	12	
109		SCREW, CROSS WOOD ROUND	M3.1X13	12	
110		WASHER, PLANE	M6	10	D20

FIG.4 UNIT, CABINET TITLE

NO.	CODE NO.	NAME	MATERIAL/SPECIFICATION	QTY	NOTE
01	0000061459	BOX, TITLE	PLYWOOD T12.18	1	
02	0000061439	PLATE, REFLECTOR	SUS304 T1.0	1	
03	0000061443	JOINT	SECC T2.3	2	
04	0000061444	FIXTURE, PANEL	SECC T1.2	2	
05	0000061445	FIXTURE, PANEL	SECC T1.2	2	
06	0000053854	BRACKET, LAMP	SECC T1.2	1	
11	0000071740	PANEL, LAMP	PMMA T3	1	
12	0000071741	PANEL, TITLE	PMMA T3	1	
21	0000059791	LAMP.F. WITH HOLDER	HZ2055-VR3(R)	1	
22	0000054102	LEG, RUBBER	H-K.2017	2	
23	0000048813	KNOB	A-GD.20	1	
101		SCREW, CROSS PAN	M3X12	2	
102		SCREW, CROSS PAN SEMS	M4X15	1	PW.SW
103		SCREW, CROSS PAN SEMS	M5X20	2	PW.SW
104		SCREW, CROSS TRUSS	M4X15	4	
105		SCREW, CROSS TRUSS	M5X15	7	
106		SCREW, CROSS TRUSS	M5X15	6	
107		SCREW, CROSS TRUSS	M5X15	4	
108		SCREW, CROSS TAPPING TRUSS	M4X12	4	
109		WASHER, PLANE	M8	2	

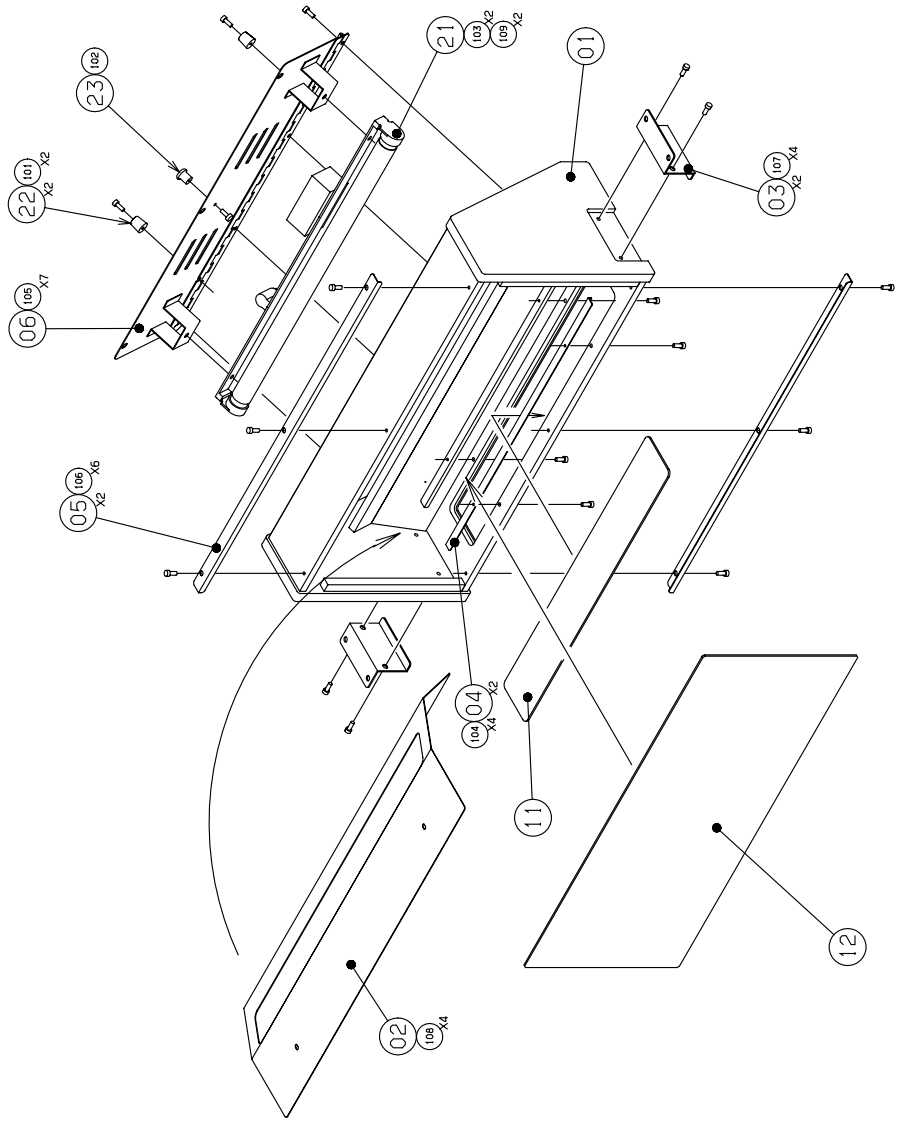

FIG.5 UNIT, RIFLE

NO.	CODE No.	NAME	MATERIAL/SPECIFICATION	QTY	NOTE
01	0000060311	ASS'Y, SCOPE	-	1	
02	0000060312	ASS'Y, BARREL	-	1	
101		SCREW, CROSS TRUSS	M4X15	2	
102		BOLT, TORX CENTER PIN TRUSS	M4X25	4	
103		SCREW, CROSS TRUSS	M4X45	1	
104		NUT, DOMED CAP	M4	3	

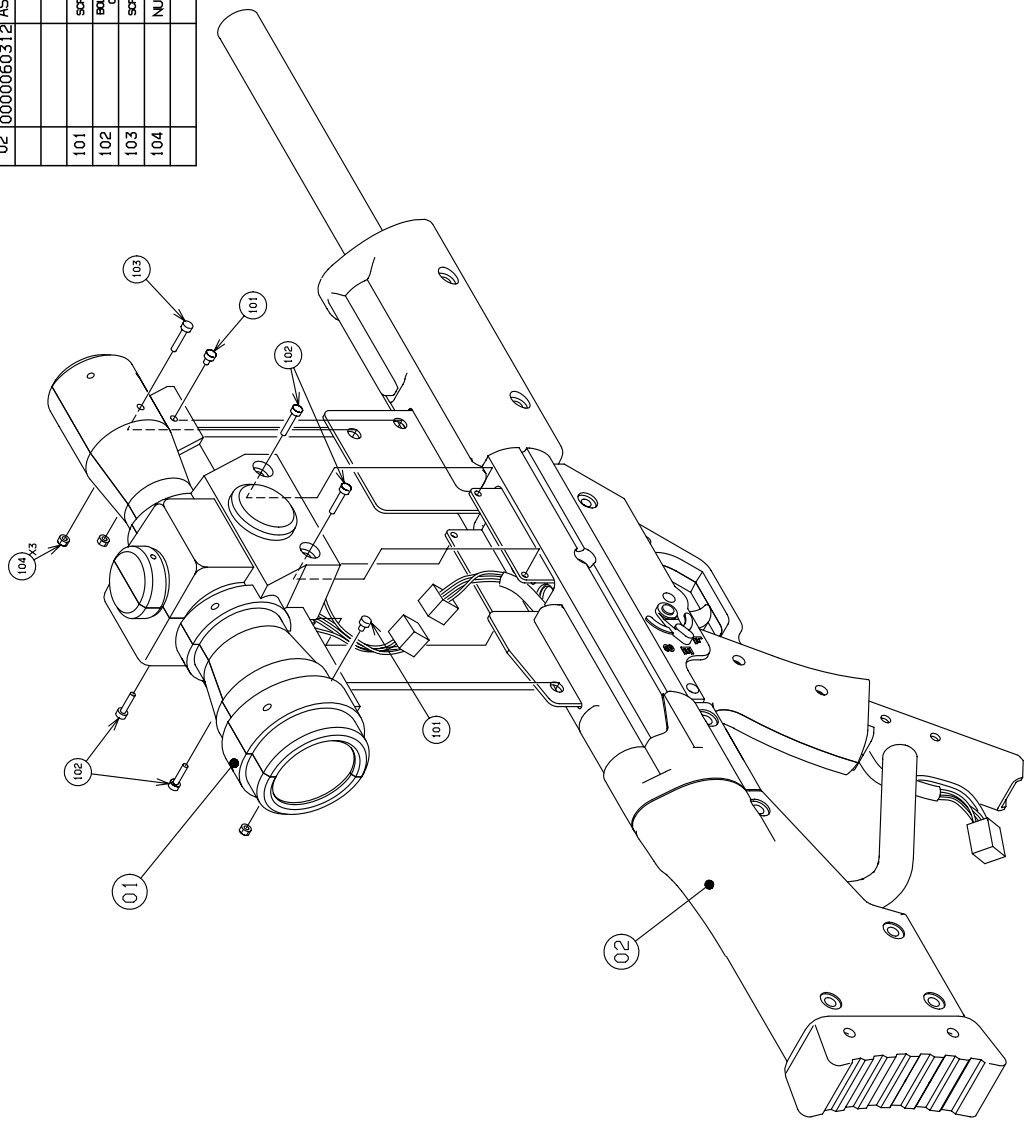

FIG.6 ASS'Y, SCOPE

NO.	CODE No.	NAME	MATERIAL/SPECIFICATION	QTY	NOTE
01	0000059782	CASE, SCOPE(L)	PC	1	
02	0000059783	CASE, SCOPE(R)	PC	1	
03	0000060326	PIPE, SCOPE	ABS	1	
04	0000060325	COVER, SCOPE	PC	1	
11	0000060333	COVER, LCD	SECC T1.0	1	
12	0000060334	BRACKET, LCD	SPCC T1.0	1	
13	0000060337	BRACKET, LCD	SPCC T1.0	1	
21	0000060324	TAPE, SPONGE	CR FORM T3	2	
22	0000060323	TAPE, SPONGE	CR FORM T2	8	
51	0000059798	DISPLAY, LCD	LB20HR-BC00	1	
52	0000059790	LENS	L-020	1	
53	0000060654	BUSH	DP-187	1	
61	0000060479	PCB(L) UNIT	-	1	
62	0000060522	LABEL, PL/HIVOLT	YUPO-TAX	1	
63	0000060424	ASS'Y, LCD	-	1	
64	0000060617	WIRE	-	1	
65	0000060854	CABLE, FFC	-	1	
101		SCREW, CROSS PAN SEMS	M3X8	10	SW
102		BOLT, HEX SOCKET CAP	M3X30	6	
103		BOLT, HEX SOCKET CAP	M3X35	1	
104		SCREW, CROSS TAPPING TRUSS	M4X8	2	
105		SPACER, PC	D6, L3	4	
106		NUT, DOMED CAP	M3	7	

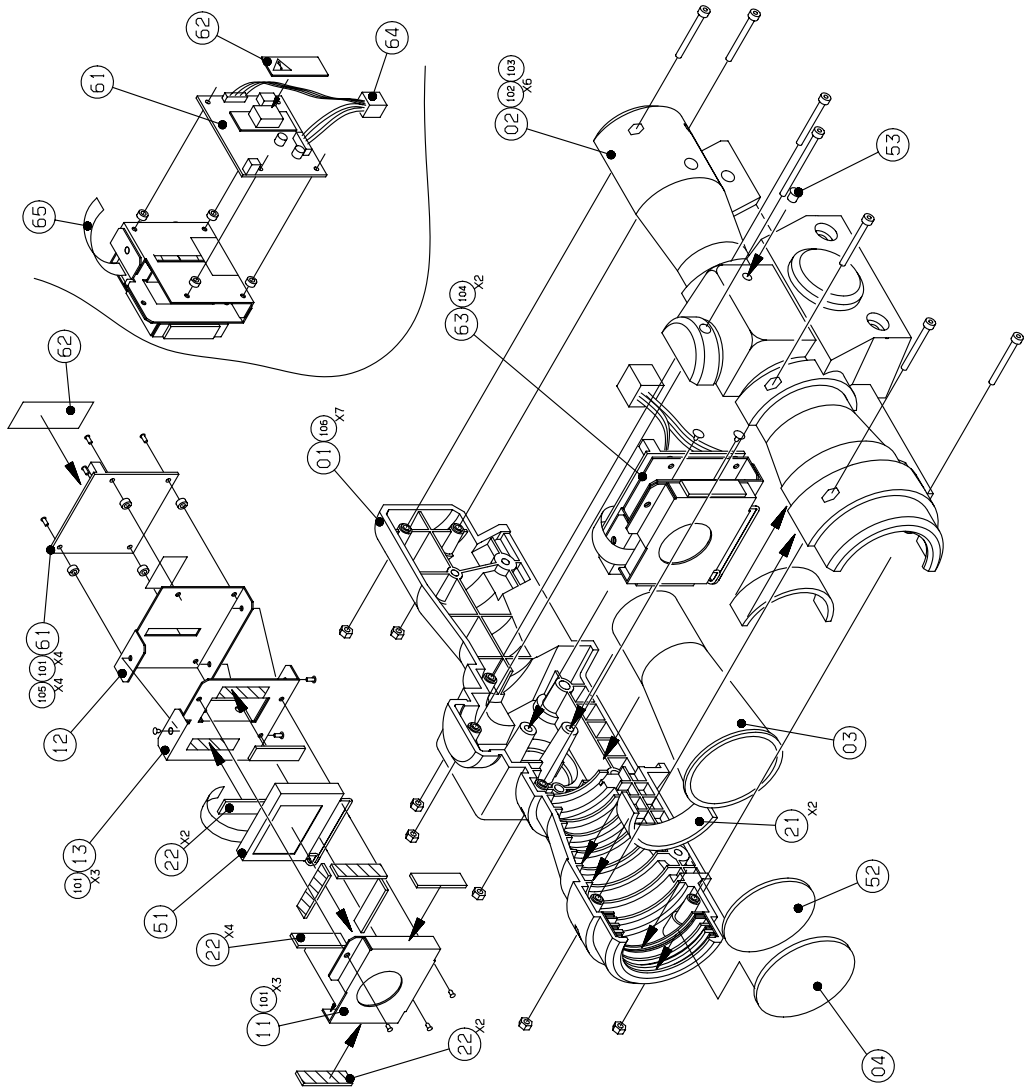

FIG.7 ASS'Y, BARREL

NO.	CODE No.	NAME	MATERIAL/SPECIFICATION	QTY	NOTE
01	0000059784	CASE, GRIP(L)	PC	1	
02	0000059785	CASE, GRIP(R)	PC	1	
03	0000059786	TRIGGER	PC	1	
04	0000059781	CASE, BARREL	PE	1	
05	0000060163	COVER, STOCK	PE	1	
11	0000060328	FRAME, GRIP	SPCC T2.3	1	
12	0000060329	FRAME, SCOPE	SPCC T2.3	2	
13	0000060335	FRAME, SCOPE	SPCC T2.3	1	
14	0000060330	FRAME, SCOPE	SPCC T2.3	1	
15	0000060336	FRAME, SCOPE	SPCC T2.3	1	
16	0000060332	FRAME, STOCK	SPCC T1.6	1	
17	0000060331	FRAME, STOCK	SPCC T1.6	1	
18	0000060338	FRAME, STOCK	SPCC T1.6	1	
19	0000060339	FRAME, GRIP	PIPE S25.5S400	1	
20	0000060340	FRAME, GRIP	SPCC T1.6	1	
21	0000060341	FRAME, BARREL	A6063TD	1	
22	0000060327	SPRING	SWPA D1.0	1	
31	0000050347	SWITCH, MICRO	SS-5GLT/OMRON	1	
32	0000060595	WIRE	-	1	
101		SCREW, CROSS PAN SEMS	M4X10	27	
102		SCREW, CROSS PAN SEMS	M5X15	10	
103		SCREW, CROSS TRUSS	M4X8	26	
104		SCREW, CROSS TRUSS	M4X15	4	
105		BOLT, HEX SOCKET CAP	M4X10	1	
106		BOLT, HEX SOCKET CAP	M4X30	2	
107		BOLT, BUTTON HEAD	M5X25	2	
108		WASHER, TOOTHED LOCK	M4	1	
109		NUT, NYLON	M5	4	
110		NUT, DOMED CAP	M4	3	
111		NUT, DOMED CAP	M5	2	

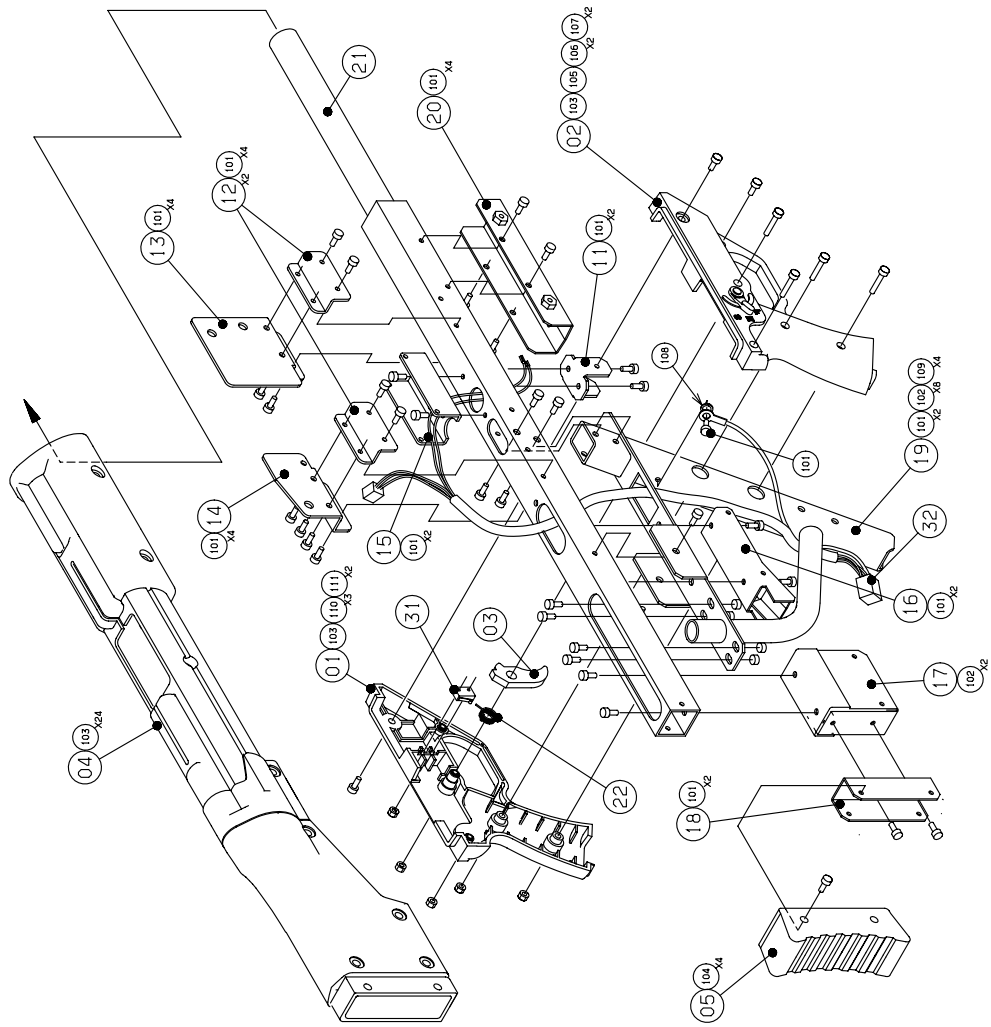

FIG.8 UNIT, MECHANISM

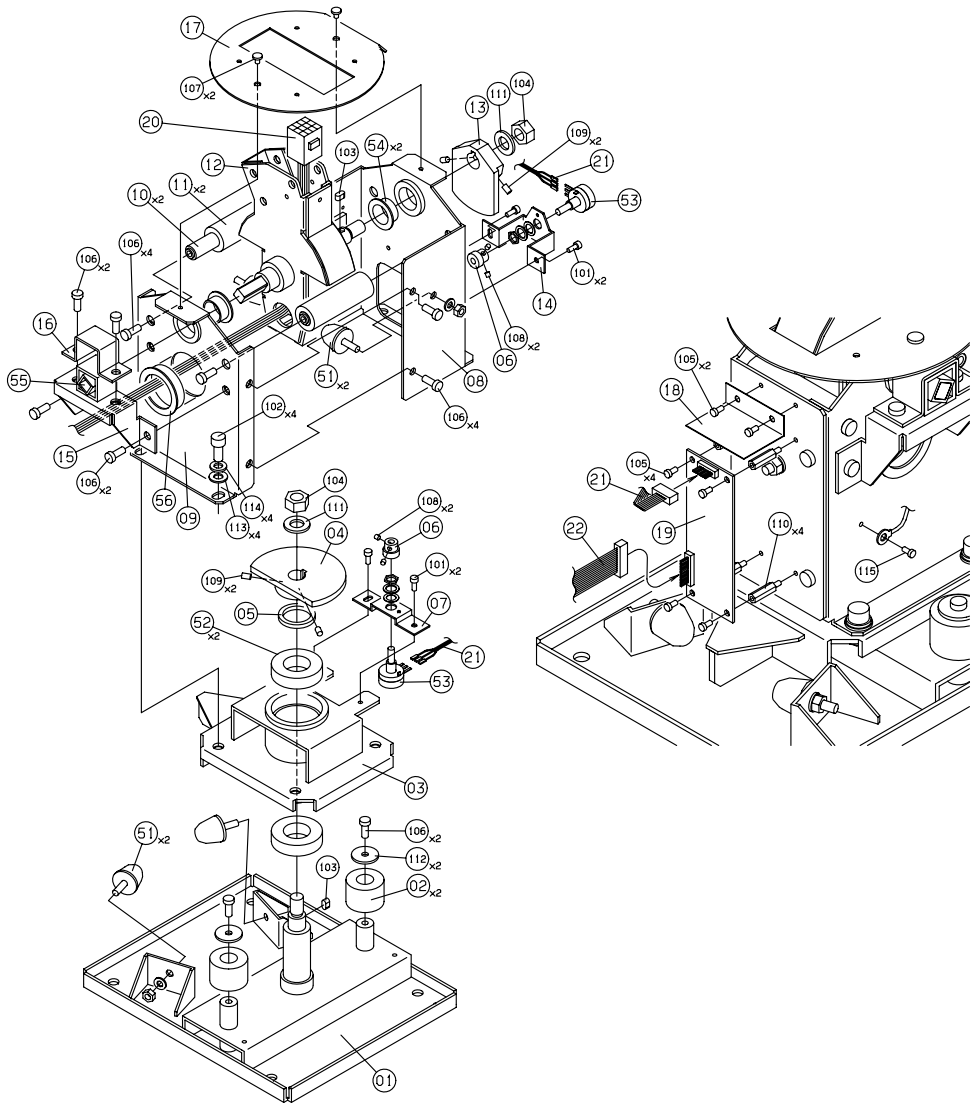

NO.	CODE.NO.	NAME	MATERIAL/SPECIFICATION	QTY	NOTE
01	0000060642	BASE	S45C/SPCC T3.2	1	
02	0000060629	RUBBER,STOPPER	UR HS90	2	
03	0000060637	BRACKET,BEARING	SPCC T3.2	1	
04	0000060630	GEAR	SS400	1	
05	0000060625	SPACER	SS400	1	
06	0000060632	GEAR	SS400	2	
07	0000060626	BRACKET,P.METER	SPCC T1.6	1	
08	0000060638	FRAME	SPCC T2.3	1	
09	0000060639	FRAME	SPCC T2.3	1	
10	0000060624	PIN,STOPPER	SS400	2	
11	0000060628	RUBBER,STOPPER	UR HS90	2	
12	0000060641	SHAFT	S45C/SPCC T3.2	1	
13	0000060631	GEAR	SS400	1	
14	0000060627	BRACKET,P.METER	SPCC T1.6	1	
15	0000060640	BRACKET,SUSPENSION	SPCC T2.3	1	
16	0000060636	BRACKET,SUSPENSION	SPCC T2.3	1	
17	0000060633	PLATE,MASK	SECC T1.6	1	
18	0000060580	SHEET,COVER	PVC T0.5	1	
19	0000060481	PCB(J)UNIT		1	
20	0000060596	WIRE	GU2	1	
21	0000060597	WIRE	G_VOL	1	
22	0000060602	WIRE	A/D IN	1	
51	0000059792	STOPPER,RUBBER	RI-25	4	
52	0000059794	BEARING	7005	2	
53	0000001723	POTENTIOMETER	EWS-U0AS25E53	2	
54	0000059795	BUSH	R-MLCF2010	2	
55	0000059789	SUSPENSION,RUBBER	DR-S-15X25	1	
56	0000060665	BUSH	NB-35	1	
101		BOLT,HEX SOCKET CAP	M4x10	4	WA(SW,PW)
102		BOLT,HEX SOCKET CAP	M8x18	4	
103		KEY,PARALLEL	5x5x10	2	
104		NUT,NYLON	M12	2	
105		SCREW,CROSS PAN SEMS	M3x6	6	SW,PW
106		SCREW,CROSS PAN SEMS	M6x15	14	SW,PW
107		SCREW,CROSS TRUSS	M4x6	2	
108		SCREW,HEX SOCKET SET	M4x4	4	W POINT
109		SCREW,HEX SOCKET SET	M5x8	4	W POINT
110		SPACER	BS-318	4	
111		WASHER,PLAIN	M12	2	
112		WASHER,PLAIN	M6	2	D=25,T=2.3
113		WASHER,PLAIN	M8	4	
114		WASHER,SPRING	M8	4	
115		SCREW,CROSS PAN SEMS	M4x10	1	SW,PW

FIG.9 ASS'Y, TRANSFORMER

NO.	CODE NO.	NAME	SPEC./CATALOG NO.	QTY	NOTE
01	0000071739	BASE TRANSFORMER	SECC T1.6	1	
02	0000043603	TRANSFORMER	500VA	1	
101		SCREW, CROSS PAN SEMS	M6X12	4	SW, PW

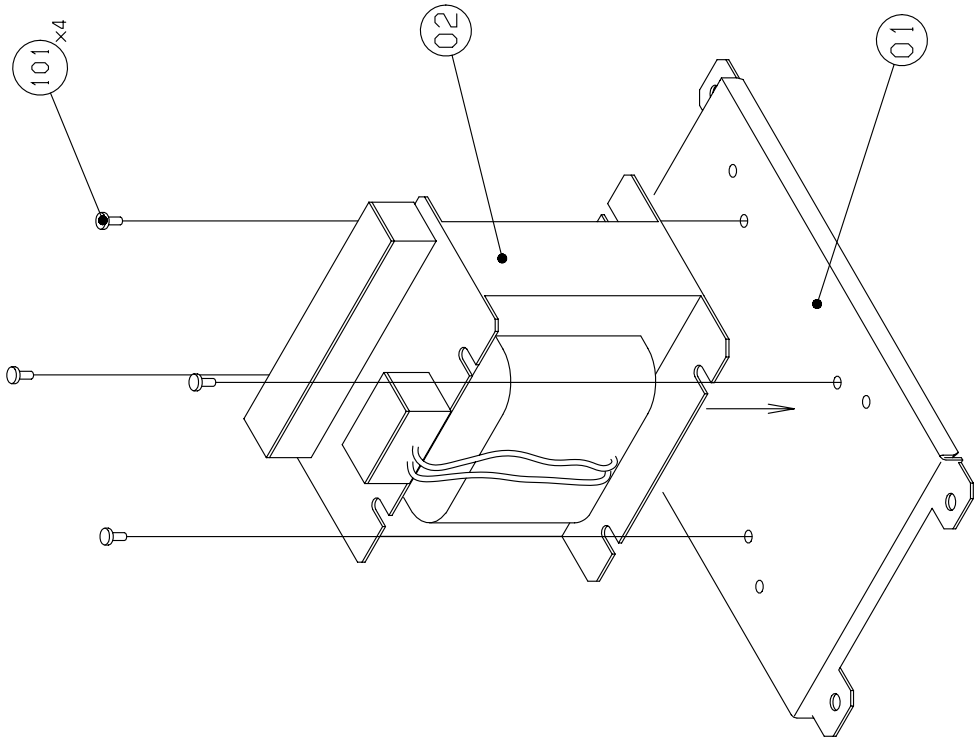

FIG.10 ATTACHMENT

NO.	CODE NO.	NAME	MATERIAL	SPECIFICATION	QTY	NOTE
1	0000036692	CABLE, AC	EQU		1	
2	0000006398	CABLE, RF		2.0M	1	
3	0000072498	BOOK, MANUAL			1	
4	0000062383	WRENCH, KEY TORX		M4	1	
5	0000005537	KEY, LOCK	NS-812-W/2		2	
6	0000001676	KEY, LOCK	NS-801-W/2		2	
7		SCREW, CROSS TRUSS		M6×15	4	
8	0000072817	POP			1	
9	0000072494	LABEL, PLAYER			1	
10	0000004202	BAG		60X85 T0.04	1	
11	0000004319	BAG		230X350 T0.05	2	

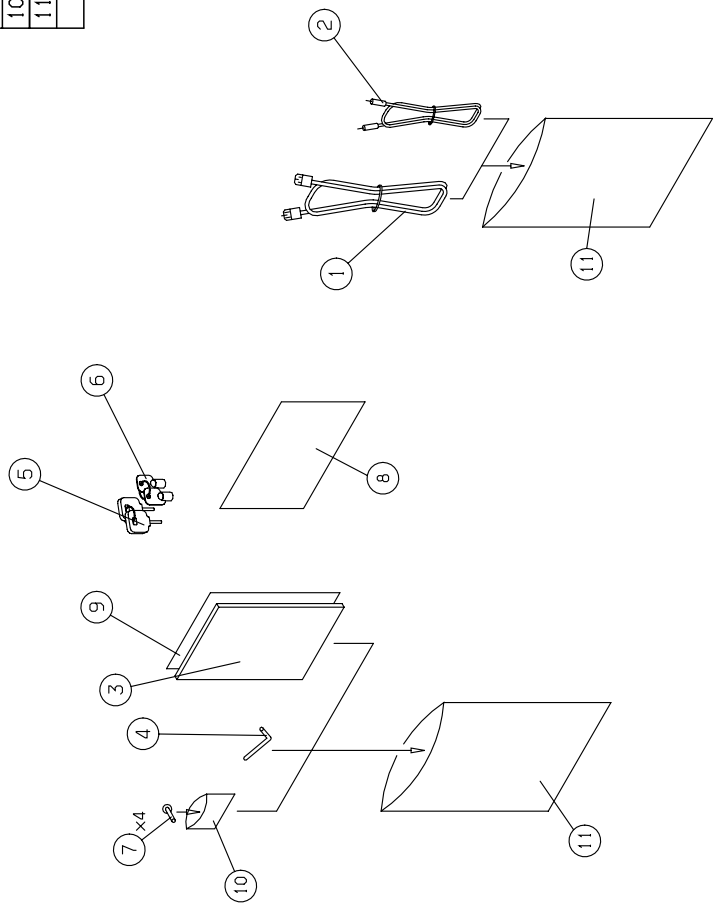

8-2 Wiring diagram

GQ931-TB specifications for regions using 110 voltage area in Asia.
1/2

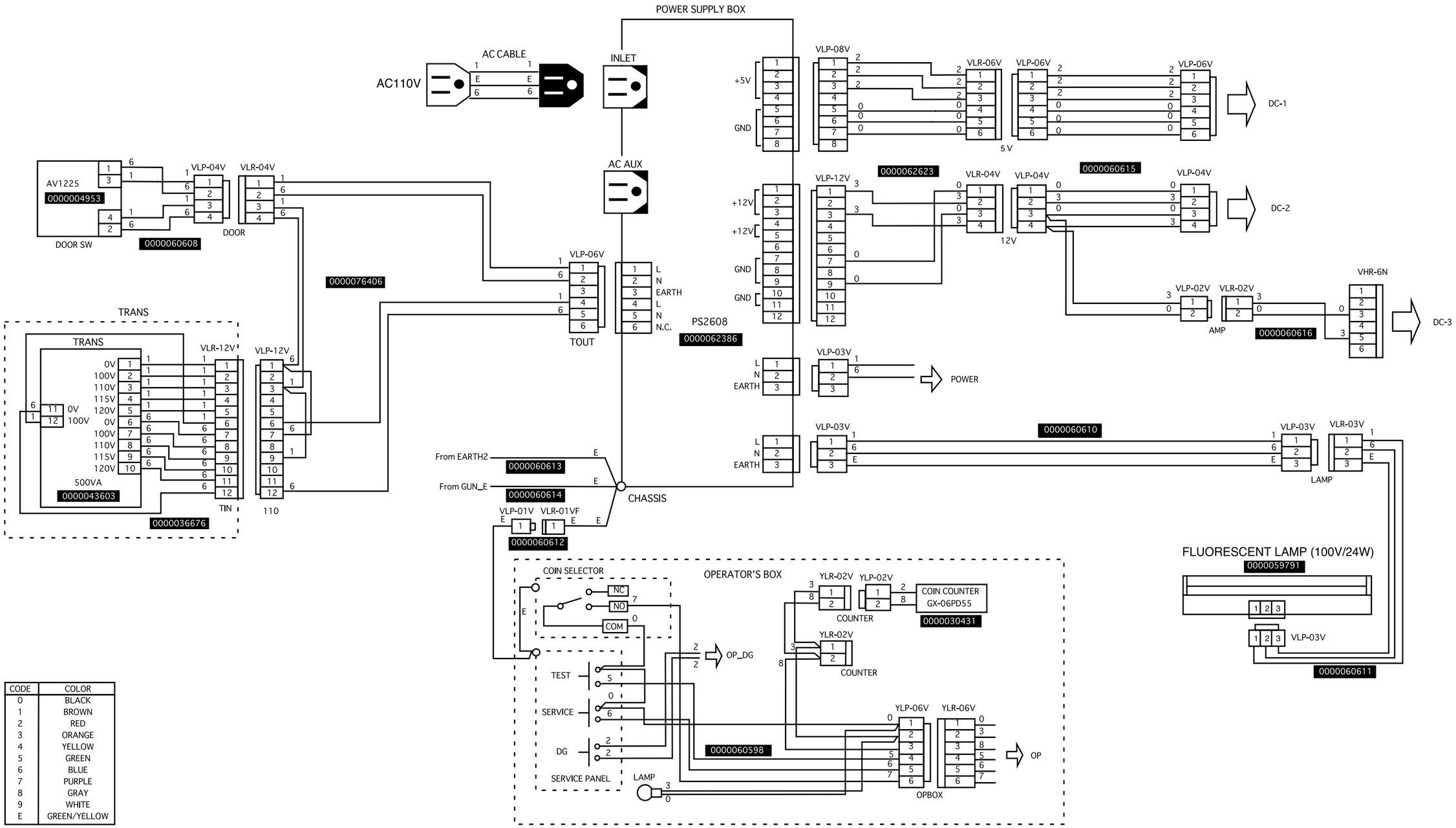

CODE	COLOR
0	BLACK
1	BROWN
2	RED
3	ORANGE
4	YELLOW
5	GREEN
6	BLUE
7	PURPLE
8	GRAY
9	WHITE
E	GREEN/YELLOW

Wiring diagram

GQ931-TB specifications for regions using 110 voltage area in Asia.
2/2

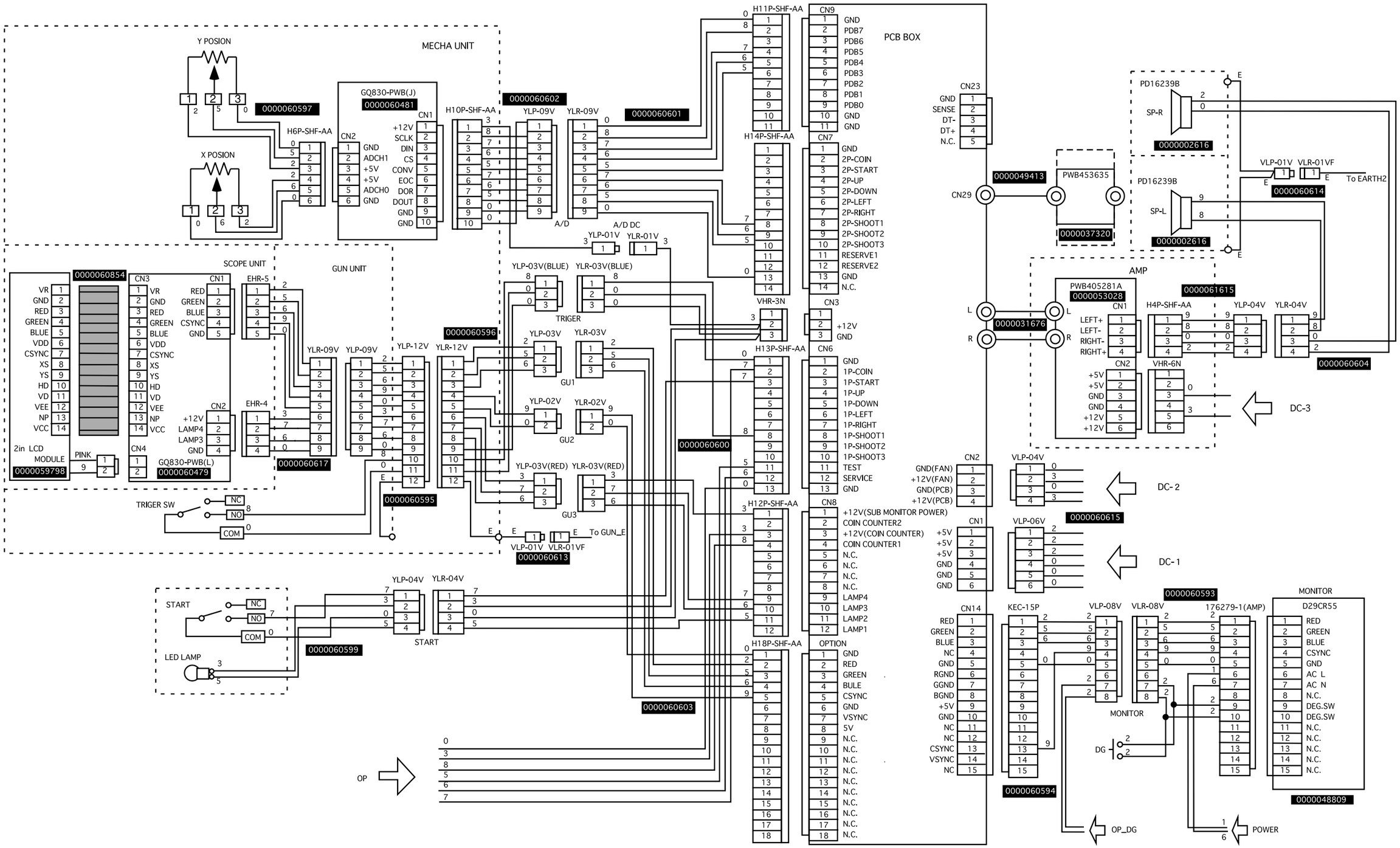

Wiring diagram

GQ931-HD/SD specifications for regions using 220 voltage area in Asia.
1/2

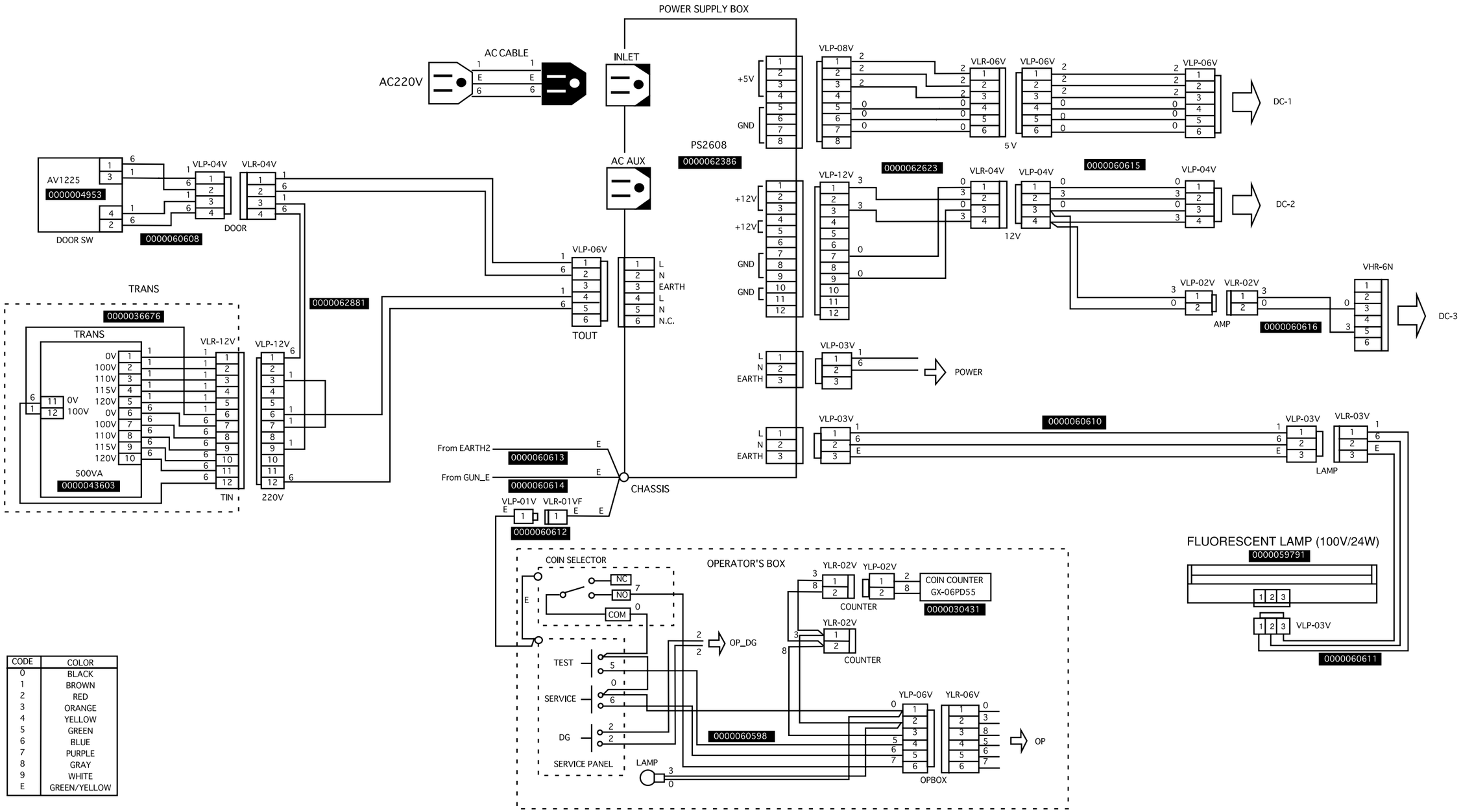

CODE	COLOR
0	BLACK
1	BROWN
2	RED
3	ORANGE
4	YELLOW
5	GREEN
6	BLUE
7	PURPLE
8	GRAY
9	WHITE
E	GREEN/YELLOW

Wiring diagram
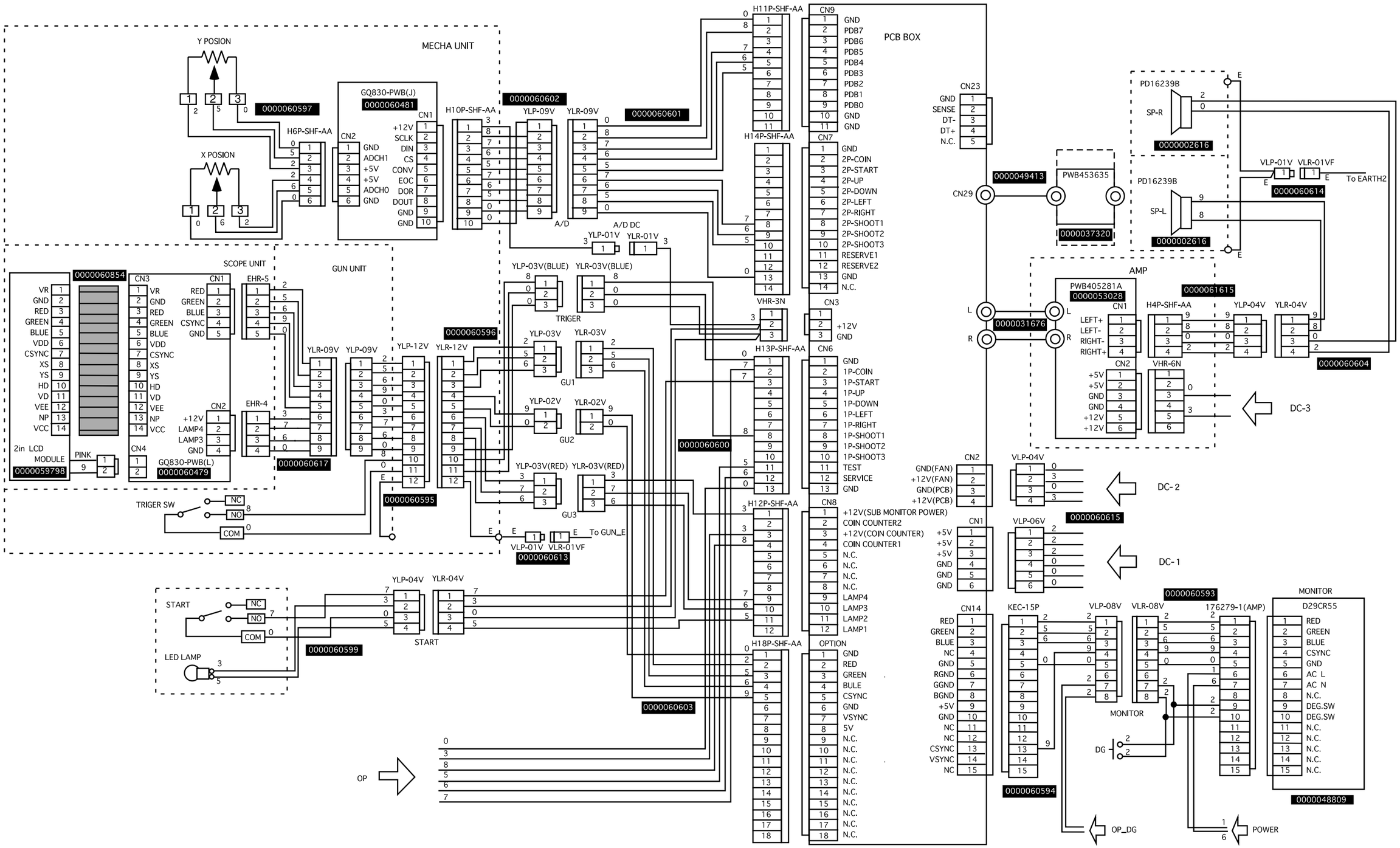
GQ931-HD/SD specifications for regions using 220 voltage area in Asia.
2/2